Ohmeda

EDB/ECI

Infant Warmer Systems
Model 3000 and 3300
Service Manual

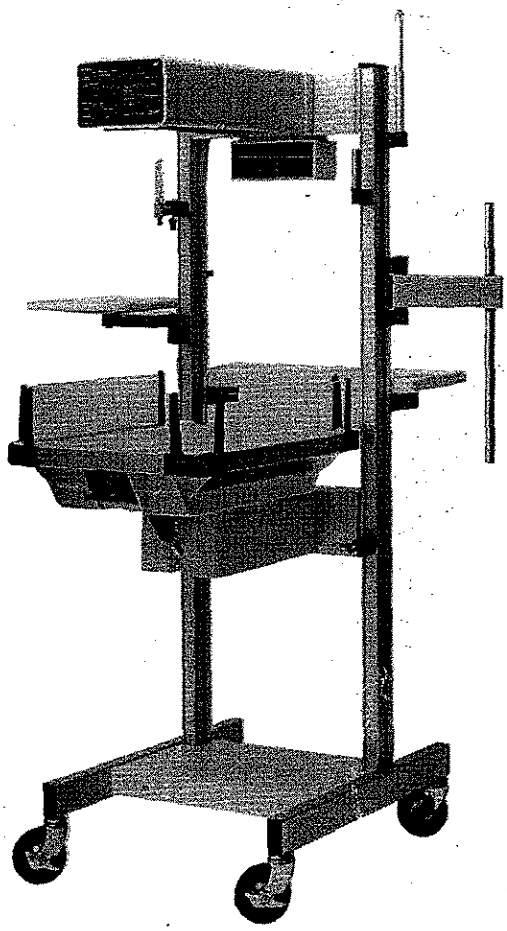

BOC Health Care

Ohmeda
Service Manual

Infant Warmer System
Model 3000 and 3300

Table of Contents

Important

The information contained in this service manual pertains only to those models of products which are marketed by Ohmeda as of the effective date of this manual or the latest revision thereof. This manual was prepared for exclusive use by Ohmeda service personnel in light of their training and experience and the availability to them of proper tools and test equipment. Consequently, Ohmeda provides this manual to its customers purely as a business convenience and for the customer's general information only without warranty of the results with respect to any application of such information. Furthermore, because of the wide variety of circumstances under which maintenance and repair activities may be performed and the unique nature of each individual's own experience, capacity, and qualifications, the fact that customer has received said information from Ohmeda does not imply in any way that Ohmeda deems said individual to be qualified to perform any such maintenance or repair service. Moreover, it should not be assumed that every acceptable test and safety procedure or method, precaution, tool, equipment or device is referred to within, or that abnormal or unusual circumstances may not warrant or suggest different or additional procedures or requirements.

This manual is subject to periodic review and customers are cautioned to obtain and consult the latest revision thereof and suggestions are invited from our customers for consideration by Ohmeda with these periodic reviews.

WARNING: After completing a repair of the Infant Warmer System the appropriate calibration procedure must be performed to make sure the Infant Warmer System is in proper operating condition. In addition a final electrical safety check and leakage current test must be performed. Record the information for future reference.

WARNING: After completing any portion of the calibration and adjustments procedure for the Infant Warmer System the checkout procedure must be performed to make sure the Infant Warmer System is in proper operating condition. In addition a final electrical safety check and leakage current test must be performed. Record the information for future reference.

CAUTION: Servicing of this product in accordance with this service manual should never be undertaken in the absence of proper tools, test equipment and the most recent revision of this service manual which is clearly and thoroughly understood.

This static control precaution symbol appears throughout this manual. When this symbol appears next to a procedure in this manual, static control precautions **must** be observed. Use the static control work station (Part No. 0175-2311-000) to help ensure that static charges are safely conducted to ground and not through static sensitive devices.

Repair Policy and Procedure

Note: Service must be performed by a "Technically Competent" individual.

Do not use malfunctioning equipment. Make all necessary repairs, or have the equipment serviced by an Authorized Ohmeda Service Representative. After repair test the equipment to ensure that it is functioning properly, in accordance with the manufacturer's published specifications.

To ensure full reliability, have all repairs and service done by an authorized Ohmeda Service Representative. If this cannot be done, replacement and maintenance of those parts listed in this manual may be undertaken by a competent, trained individual having experience in the repair of this type of equipment.

CAUTION: No repair should ever be undertaken or attempted by anyone not having such qualifications.

Replace damaged parts with components manufactured or sold by Ohmeda. Then test the unit to ascertain that it complies with the manufacturer's published specifications.

Contact the nearest Ohmeda service office for service assistance. If you send the unit to the Ohmeda Service Center, package it securely in the original shipping container, if possible, and ship it prepaid. Enclose a letter with the unit describing in detail any difficulties experienced and the repairs felt necessary. In all cases, other than where Ohmeda's warranty is applicable, repairs will be made at Ohmeda's current list price for the replacement part(s) plus a reasonable labor charge.

CAUTION: Detailed drawings and procedures for more extensive repairs are included herein solely for the convenience of users having proper knowledge, tools, and test equipment, and for service representatives specially trained by Ohmeda.

Technical Competence

The procedures described in this service manual should be performed by trained and authorized personnel only. Maintenance should only be undertaken by competent individuals who have a general knowledge of and experience with devices of this nature.

Genuine replacement parts manufactured or sold by Ohmeda must be used for all repairs.

Read completely through each step in every procedure before starting the procedure; any exceptions may result in a failure to properly and safely complete the attempted procedure.

Precautions

Warnings

After completing a repair of the Infant Warmer System the appropriate calibration procedure must be performed to make sure the Infant Warmer System is in proper operating condition. In addition a final electrical safety check and leakage current test must be performed. Record the information for future reference.

After completing any portion of the calibration and adjustments procedure for the Infant Warmer System the checkout procedure must be performed to make sure the Infant Warmer System is in proper operating condition. In addition a final electrical safety check and leakage current test must be performed. Record the information for future reference.

Overloading the shelves can affect the stability of the unit.

Do not perform the Check-Out Procedure while a patient occupies the Infant Warmer System.

Never oil or grease oxygen equipment unless a lubricant that is made and approved for this type of service is used. Oils and grease oxidize readily, and in the presence of oxygen, will burn violently. Vac Kote* is the oxygen service lubricant recommended (Order No. 0220-0091-300).

When replacing gauges, be sure to use identical pressure ranges.

Do not use oil or oil bearing materials on or near the regulator. Oils and greases oxidize readily and, in the presence of oxygen, they will burn violently. All metallic parts of the regulator must be discarded if contaminated with oil or grease.

* Vac Kote is a trademark of the Ball Corporation.

Cautions

Servicing of this product in accordance with this service manual should never be undertaken in the absence of proper tools, test equipment and the most recent revision of this service manual which is clearly and thoroughly understood.

This static control precaution symbol appears throughout this manual. When this symbol appears next to a procedure in this manual, static control precautions **must** be observed. Use the static control work station (Part No. 0175-2311-000) to help ensure that static charges are safely conducted to ground and not through static sensitive devices.

No repair should ever be undertaken or attempted by anyone not having such qualifications.

Detailed drawings and procedures for more extensive repairs are included herein solely for the convenience of users having proper knowledge, tools, and test equipment, and for service representatives specially trained by Ohmeda.

For the Model 3000 Infant Warmer System the height of the bed should be 27 inches ±2 inches from the bottom of the heater module for proper heating and temperature control.

Insulation on electrical wiring can deteriorate with age. Check for brittle or deteriorated insulation on power cord and all other electrical wiring.

Use the Static Control Work Station (Part No. 0175-2311-000) to help ensure that static charges are safely conducted to ground. The Velostat material is conductive. Do not place electrically powered circuit boards on it.

The back panel and display panel may drop down when the bottom cover mounting screws are removed. Be sure to secure the panels with tape before disassembly.

Disconnect the Infant Warmer System power cord and allow the unit to cool before replacing the examination or alarm light.

Disconnect the Infant Warmer System power cord and allow the unit to cool before replacing the examination light. The lamp normally operates at a high temperature.

Take static precautions for these procedures.

For safety have at least 2 people available to replace a caster. Remove all accessory equipment.

1/Functional Description

A. Power Supply Board

This is a functional description for the Infant Warmer System Power Supply Board Part No. 0631-5032-700. Refer to Schematic No. 0676-0327-000 for a detailed circuit diagram.

The power supply board contains circuitry for the control and monitoring of voltage devices. The board also provides power to the control board and the display board. Also found on the board is a line voltage sensing circuit that provides an indication of line voltage to the microcontroller.

The control circuits for each line voltage device on the power supply board are functionally identical with a logic "High" signal from the control board switching "On" the desired device. This is performed with an opto-isolator triac driver so low/line voltage circuits can interact but remain electrically isolated (2500 volt dielectric).

The heater is controlled from the supply board with an opto-isolator triac driver and triac. There is also a relay contact connected in series with the neutral to the heater triac. This is used to switch "Off" the heater if the heater triac fails or there is a failure on the control board.

The regulator circuits provide a +5 Vdc supply to the display board and +5 Vdc, and +9 Vdc, supplies to the control board. A ni-cad battery supplies the 5 Vdc supply and a de-rated 9 Vdc supply for standby power, in the case of a power loss. Standby power of 9 volts is used to activate the transducer alarm, while the 5 volt supply provides power to the microcontroller and associated IC's for memory retention purposes.

5 Volt LEDS
A nominal 8 Vac is input to the power supply board at J11 pins 3 and 4. The line frequency is also connected to the control board via J12 pin 2. The bridge rectifier CR2 and capacitor C11 provide a filtered unregulated 8 Vdc to the relay, opto-isolators, and the regulator VR12. The 8 Vdc unregulated supply can be measured at TP-1. The unregulated supply must be a minimum of 7.32 volts for proper operation of the relay circuit.

The output of regulator VR2 is nominally +5 Vdc and supplies power to drive the LED displays on the display board. The output is measurable at J12 pin 12 (TP-10). When the supply voltage is within 10% of nominal, the output voltage should be between 4.8 and 5.2 volts dc with a maximum load of 500 ma. The maximum allowable ripple voltage is 150 millivolts.

Line Voltage Sensing
A voltage of approximately 11 Vac from the transformer secondary is input to the board at J11 pins 1 and 2. Bridge rectifier CR1 and capacitor C12 provide a full wave, filtered voltage of approximately 12 Vdc. Resistor R3 is preset to produce an output of approximately 0.6 volts at J12 pin 11 (TP-11) when the line voltage is at the nominal value for the unit. The analog voltage signal at J12 Pin 11 connects to the control board and is fed into the A/D Converter, ADC 3711 (U6), via the multiplexer, MC14051B (U-13). The digital output of the A/D converter is input to the microcontroller where the software then adjusts the power to the heater to compensate for variations in line voltage.

9 Volt Standby
The output of regulator VR3 is adjusted by R4 to provide 9.0 ± 0.2 volts (TP12). This voltage is used for charging the NI-CAD battery, and supplying the input voltage to the +5 standby regulator.

5 Volt Standby
When line voltage is available, current flows from the output of VR3 and through CR5 to provide 9.0 ± 0.2 volts to the input of VR4, and to J12 pin 3 (TP-12). In turn, regulator VR4 outputs a voltage of 5.0 ± 0.2 volts to J12 pin 14 (TP-9) with a maximum ripple voltage of 150 millivolts.

If power loss occurs with the unit switched ON, the 7.2 volt NI-CAD battery maintains a de-rated output voltage of approximately 6.5 volts to pin 3 of J12 (TP-12). It also provides input to VR4. The output of VR4 only regulates to approximately 5.0 volts as the input voltage drops below 7.0 volts.

Observation Light, Alarm Lights, Motor Control
The control circuits for the observation light, and the alarm light are similar. The alarm light is a resistive load and does not have a snubber circuit in parallel with the load. The snubber circuit on the observation light supply protects the triac from large voltage spikes characteristic of inductive loads. If the control lines are logic "Low", less than 0.45 volts, this keeps the FET, triac driver, and triac switched "Off". The triac acts as a switch to the line voltage circuit, removing voltage from the load.

When a device should be switched "On", a logic "High" of 2.4 volts minimum is output to the corresponding FET. The FET switches "On" causing the LED of the isolator-driver to switch on. The isolator/driver output drives sufficient current to the triac gate, switching the triac "On" allowing the selected device to switch "On".

Heater Status and Control
The heater circuitry consists of a monitoring circuit, a controller for the heater, and a relay to switch "Off" the heater in the event of a triac or system failure.

The full wave bridge rectifier CR6 takes a sample (through R 13) of the ac signal supplied to the heater and provides rectified dc to the opto-isolator U3. If the heater is "On" the dc output switches "On" the LED in the opto-isolator, except at voltage levels below the forward bias voltage. When the LED is "On" the transistor goes into saturation causing the output at J12 pin 1 to go "Low" (about 0.3 volts). When the heater is "Off" the dc signal is in the region of zero potential and there is insufficient forward bias voltage for the LED. This switches "Off" the transistor allowing capacitor C10 to charge and causes J12 pin 1 to go high (5 volts). When the heater is switched "On" the LED switches the transistor "On" again, and the capacitor discharges. The low output shows small glitches caused by the charge/discharge of the capacitor at every half cycle. The glitches are acceptable provided they do not exceed the trigger voltage of 1.4 volts for the 74LS132 on the Control Board.

1/Functional Description

The heater control circuit uses a zero crossing opto-isolator triac driver to isolate the line voltage from the low voltage circuits. Operation of the heater control and other line voltage controls differ only in the type of isolator used and the use of snubber circuits. When a logic "High" signal is sent to the heater control circuit from J12 pin 9 the output of the isolator will not switch "On" until the ac signal of the heater crosses the zero potential from a negative voltage. After the input line from the microcontroller goes "Low", heat will not switch "Off" until the first zero crossing preceded by the negative half cycle. This provides zero crossing control of the heater switching. The time that the heater is "On" depends on the percent heat desired (controllable in 5% increments).

The microcontroller also monitors the line voltage and adjusts the number of ac cycles that the heater is switched "On". This provides heater compensation. If the line voltage is not at the nominal value these two functions result in 60 levels of heat.

Relay
The relay circuit is used to switch "Off" the heater in the event of a triac or microcontroller failure. Under normal conditions the input line from J12 pin 10 is a logic "High", 2.4 volts minimum. A logic "High" signal on the input from the control board switches "On" the FET causing the relay coil to energize and close the switch. If the FET input is a "Low" from the control board, (0.5 volts max.) the FET switches "Off" and the relay contacts open. The signal at J12 pin 10 comes from U1 on the control board which is a part of a logic/timing circuit independent of the microprocessor.

A minimum voltage of 7.2 volts is required to energize the relay coil. Therefore the minimum allowable voltage for the 8 volt unregulated supply is 7.32 volts since the FET has an internal voltage drop of 0.12 volts.

B. Control Board

This is a functional description for the Infant Warmer System Control Board Part No. 0631-5033-700. Refer to Schematic No. 0676-0326-000 for a detailed circuit diagram.

The control board contains electronic circuitry involved with the measurement, control, computation, memory, logic, and decision making functions of the Infant Warming System. The principle IC on this board is the 8031 single component, 8-bit microcontroller. The 8031 has: an internal read/write memory (RAM)of 128 bytes, 32 I/O lines configured as four 8-bit parallel ports, two 16-bit timers, a five source two priority nested interrupt, a programmable serial I/O port, and an on-chip oscillator with clock circuitry. The program memory is stored in a 2764 64k bit (8k × 8) UV EPROM. An octal transparent latch (74LS373) is connected to address inputs of the EPROM to permit the use of the bi-directional data bus port of the microcontroller for addressing the EPROM and receiving program instructions.

Four ICs with a network of precision resistors are used to interface the microcontroller. The temperature sensor, calibration resistors, or line voltage scaler are selected by an MC14051B 8 Channel Multiplexer. An LM-10 precision reference with adjustable reference buffer, and on-board operational amplifier furnishes a stable reference supply. This is required by the temperature measurement circuits and the ADC 3711 Analog to Digital Converter. An 8243 I/O expander is used to interface the microcontroller with the multiplexer and the A/D converter.

The control board is also equipped with several IC's that form the triac watchdog circuit, watch-dog timer, and the audio alarm tone generator. The audio transducer for the alarm signals and its driver circuit are also included on the control board.

The operation of the circuits listed in the preceding paragraphs will be explained in detail below.

Analog to Digital Converter
Temperatures are measured using a negative temperature coefficient thermistor that is calibrated for specific resistance values and interchangeability. Analog voltage signals inversely proportional to temperature are derived from a voltage divider network consisting of a 5.76k ± 0.1% resistor in series with the temperature sensor. The voltage source for the measuring circuit is obtained from the LM-10's internal precision reference source of 200 mV amplified to a nominal 1.0 volts by the reference buffer of the LM-10. The Op-amp portion of the LM-10 provides an adjustable reference of 2.0 volts nominally, which is required by the A/D converter, U6. In addition to the patient probe, there are three other voltage divider networks on the control board. Two have fixed output and are used for calibration check points of the A/D system at 25.0 and 37.9 degrees C. The third divider network is unused.

A separate input to the control board A/D circuit comes from the line voltage monitor network located on the power supply board.

The outputs of all the voltage dividing networks are connected to individual switch input terminals of U13, the MC14051B Analog Multiplexer. The MC14051B contains eight normally open switches with a common output terminal. The common output of the MUX (pin 3) is tied directly to the analog input (pin 9)of the A/D converter. The microcontroller selects which sensor is to be measured by toggling the control lines, pin 11A, pin 10B, and pin 9C of the MUX via the 8243 #2, U5. The following table shows the digital codes used to select the individual switches of the MUX:

Control Inputs A B C	On Switches	Pin Number	
0 0 0	X0	13	calibration value 25C
0 0 1	X1	14	calibration value 37.9C
0 1 0	X2	15	line voltage monitor
0 1 1	X3	12	unused
1 0 0	X4	01	patient probe
1 0 1	X5	05	unused
1 1 0	X6	02	unused
1 1 1	X7	04	unused

Note: Inhibit terminal (pin 6) of the MUX has no effect on the switch selection because it is tied "Low" through R19 (200 ohms).

The ADC 3711, U6, uses a pulse modulation analog to digital conversion technique. The conversion rate is set by the frequency of an internal oscillation whose frequency is determined by the external components R4 and C14. The exact oscillator frequency is not critical and may vary by ± 15% from the nominal 400 kHz. The oscillator frequency may be measured on pin 18 of U6. With a nominal 400 kHz clock frequency, conversions within the ADC 3711 will take place at an approximate rate of 3 per second.

The ADC 3711 will output BCD data on demand in accordance with the coded digital signals applied to the digit select inputs D0 and D1, pins 20 and 21 respectively. The data latch enable is tied "Low", therefore, the BCD data of the A/D converter will be output to the microcontroller through 8243 #2 in conformance to the following codes that are applied to the digit select inputs:

D0	D1	Selected Digit
L	L	Digit 0 LSD
L	H	Digit 1
H	L	Digit 2
H	H	Digit 3 MSD

Note: The magnitude of the selected digit is present at pins 23 and 24.

The ADC 3711 is continuously converting the analog voltage present at its input to a number of counts between 0 and 3999 (BCD format). Therefore, the start conversion, input at pin 7, and the conversion complete, output at pin 6, are misnomered. The start conversion input only controls the transfer of information from the internal counter to the digital latches. The conversion complete output goes to a logic "Low" on the rising edge of the start conversion pulse which is issued by the microcontroller. The conversion complete will go to a logic "High" sometime later when the new conversion information has been transferred to the display latches. The start conversion pulse may occur at any time in the conversion cycle because the microcontroller is running asynchronously to the A/D clock. Therefore, the amount of time from the start to finish will vary. The maximum time difference between the start conversion and conversion complete pulses in this application is about 300 msec.

The operation of the temperature and line voltage measurement circuits can be summarized as follows: The analog voltage signal derived from a voltage divider network and a precision reference source is directed to the input of the A/D converter through an eight channel analog multiplexer. For the line voltage measurement, the voltage source is obtained from the rectified, filtered, and unregulated output of the power transformer. Switch selection is software controlled by the microcontroller which toggles the A, B, and C input lines of the multiplexer.

The analog voltage is converted in the ADC 3711 to a digital signal in four digit BCD format (0 to 3999 counts). The microcontroller sends a start conversion pulse to the ADC 3711 which then starts to update the digital data in the output latches. When all of the counts have been internally transferred, the A/D converter toggles the conversion complete output line. The microcontroller then reads the individual BCD digits using coded signals to the digit select lines of the A/D converter.

ADC Calibration

The A/D converter is calibrated by connecting a 5900 ± 0.1% ohm resistor to the patient probe jack and placing the DIP switch on the control board in the following position:

Switch #1 Open (Off)

Switch #2 Open (Off)

Switch #3 Open (Off)

Switch #4 Closed (On)

Potentiometer R44 on the control board is then adjusted until the elapsed time display reads exactly 1122. With the DIP switches in the given position, the patient temperature display will read out the actual patient temperature, even if it is outside of the normal range and the control temperature display will read out the percent of nominal line voltage.

During operation, the calibration of the A/D conversion system may be checked by pressing and holding the hidden switch located above the alarm silence switch on the control panel. After 2 seconds, the patient temperature display should read 25.0 and the control temperature display should be 37.9. The elapsed timer should read the nominal line voltage ± 2%.

Microcontroller

The control system is located in the 8031 microcontroller. It operates at a clock speed of 6MHz and can be verified by measuring the frequency at the Address Latch Enable (ALE) pin to be 1 MHz ("On" = 0.33 usec and "Off" = 0.67 usec). Grounding the EA pin enables the 8031 to execute instructions from an external memory device.

When the microcontroller performs a read instruction from EPROM, the low order address (8 bits) is output from Port 0 while the high order address (6 bits) outputs from Port 2. (Note: Bit 6 is configured only to provide expansion compatibility with a 27128 EPROM). The ALE pin goes "High" allowing the LS373 to appear transparent between the EPROM and the microcontroller. After the ALE output goes "Low", the low order address is latched to the outputs of the D flip flops within the LS373. This allows the 2764 to remain addressed by the microcontroller, and return 8 bits of data while using only two ports.

Port 1 of the 8031 is used to communicate to the three 8243 I/O expanders. Bits 5-7 are connected to the Chip Select (CS) line of the first, second, and third respective I/O expanders. Providing a "Low" signal on one and only one of the outputs activates the corresponding IC. Bits 0-3 hold the instruction to be carried out by an 8243 when the enable bit 4 transitions between "High" and "Low".

Port 3 is used to perform remaining tasks required by the control system. Connections 3.0 and 3.1, (receive and transmit respectively), are used in conjunction with the serial interface chips so that communication to an external microcomputer is possible. Connection INT0/P3.2 is a line frequency interrupt line that is used to aid in timing subroutines found within the system software. Connection T0/P3.4 sends serial data to the display driver while connection T1/P3.5 provides clocking to the driver.

Line Frequency
The line frequency circuit converts a 60 or 50 Hz sinusoidal signal into a square wave signal. The output of the circuit is used to clock the 4020B counter and to provide a low frequency clock source for the system software. The 1N4001 diode half-wave rectifies the 8 Vac (nominal) signal for use with the Schmitt trigger NAND gate. With one line tied "High", the output of the trigger will be inverted. Since the gate will not respond until the input exceeds 1.9 volts minimally, the duty cycle of the output will be slightly more than 50%.

Heater Status
The Heater Status function signals the microcontroller and the safety circuitry as to whether or not the heater is "On" or "Off". The input to the Schmitt trigger is "High" if the heater is "Off" and "Low" if the heater is "On". Small glitches appear when the heater is "On". Consult the Functional Description of the power supply board for further explanation. The output of the NAND gate is inverted because one input is tied "High".

Hardware Triac Test
The 4020B 14 bit binary counter, U9, counts at a rate equal to the line frequency and responds to the negative edge of the clock pulse. The clock signal is received from a Schmitt trigger NAND gate, pin 6 of U8. The counter resets when the 74LS123 retriggerable one shot flip flop outputs a "High" level pulse on the Q output line. With CLR tied "High" and A tied "Low", the counter will reset when B of the 74LS123, U3, is "High" at a time equal to (Q4) +(Q13) +(Q14) or after 12296 counts (Q4 = 8, Q13 = 4096, Q14 = 8192). Approximately 6.19 usec. later the output of the one shot will return to its initial "Low" state.

Q13 and Q14 of the 4020B are tied to a 2 input "And" gate which will go "High" after 12288 counts. On odd numbered counts Q1 of the counter goes "High". Q1 is tied to the CLR pin of D flip flop U1, which when "High" allows the output Q to equal the input D on the next positive edge of the clock pulse. Therefore the output at pin 5 will update on even counts. After 12288 counts (3.4133 minutes on 60Hz units, or 4.096 minutes for 50Hz units) the signal at the D input of the flip flop goes "High". This signal is also input to the microcontroller through the I/O expander U4. The software will then switch "Off" the heat. Two counts later the "High" input on D is clocked to the output Q. The heater status ("Off"-"Low", "On"-"High") sent from the Schmitt trigger NAND gate pin 11 of U8 is always present at the input of U2 pin 5. If the heater is still "On" after the 2 counts, the output of the "And" gate pin 6 of U2 will clock the second D flip flop. The outputs of the flip flops switch – Q goes "High" and "Not Q" goes "Low". A "Low" on "Not Q" sets off the audio alarm and drops out the non-resettable safety relay causing the heater to switch "Off".

Heater Status LED
A heater status LED is located on the control board for troubleshooting. The LED can be seen through the rear of the controller assembly cover. When the status line from the Schmitt trigger is "High", (heater "On") the transistor Q2 switches "On" causing the LED to emit light. If heat is "Off", the LED is "Off".

Watchdog Timer
A watch dog timer is used to "check" that the microcontroller is working properly. After every cycle through the system software the microcontroller sends a "Low" pulse to the A input of U3, a 74LS123. The RC network connected to the RxCx and Cx pins create a time constant, $t = 0.45 \times R \times C = 0.263$ seconds. If a pulse is not received at the input before the time constant expires, the output will go "Low". The high priority alarm will then be activated due to the microcontroller failure. Note when the microcontroller detects a high priority alarm condition, pulses to the watch dog circuit stop.

Alarm Tone Generator and Control Circuits
The alarm circuit consists of an alarm tone generator and control circuitry for high or low priority alarm conditions. Under a no alarm condition the 7556 timers are both inactive, (reset lines low).

Low Priority Alarm
Under normal operating conditions the input to U8 pin 9 is "High". When the microcontroller detects a low priority alarm a 1 Hz square wave is output to U8 pin 9. The timer activates, causing a 2 kHz audio output. This results in a one second "On", one second "Off" audio alarm. The 2 kHz signal is adjusted within ± 100 Hz by R38. The volume of the audio alarm is adjusted by R37. This should be adjusted fully CCW for maximum volume.

High Priority Alarm
The high priority alarm is activated if the microcontroller quits sending pulses to the watchdog timer. This occurs when a high priority alarm condition is detected or if the microcontroller fails. The high priority alarm is also activated if the hardware triac test circuitry detects a failed triac. Both timers become active with one timer feeding a 1 Hz signal to the control line of the second. The 1 Meg resistor changes the output frequency of the second timer to produce a warbling effect (two tone alternating alarm). If high and low priority alarms are both "On", the output of the "And" gate overrides the low priority signal, keeping both timers active.

Heat Control Routine
Proportional control of the heater power is obtained by varying the number of full heat cycles of ac current delivered to the heater. To allow for line voltage compensation and still have at least 20 discreet levels of heat, a proportioning range of 0 to 60 full heat cycles was selected. In other words, at very low line voltages, 100% heat will be output by having the heat "On" for 60 full cycles out of a possible maximum of 60. Similarly, at this low line voltage 90% heat is obtained by having the heat "On" for 54 out of 60 cycles.

In the "manual" mode of operation, the heat output is determined by the bargraph setting selected by the operator. There are 20 steps on the bargraph so each step represents a 5% heat increment. To accomplish the desired compensation for line voltage variations, the maximum number of heat cycles is calculated based on the last measurement of the power line voltage. For 115v nominal units, at 106 volts or less, the maximum number of heat cycles is 60. At greater than 125 volts the maximum number of heat cycles is 40 cycles out of a possible 60. Therefore, the number of cycles of current furnished to the heater in the manual mode is determined by multiplying the maximum for the line voltage present by the bargraph setting. For example: assume the line voltage is 115v (maximum number of cycles "On" = 50) and the bargraph setting is 30%; the number of heat cycles to be output will be 0.3 times 50 = 15 cycles. Under these conditions the heat will be "On" for 15 cycles and "Off" for 45 cycles, this sequence will continue until the line voltage changes or the setting is changed on the bargraph.

In the "servo" mode, the heater power is controlled by comparing the patient's skin temperature to the selected value of control temperature. The difference between the control temperature and the patient temperature is referred to as"PTG"(patient temperature gradient). A positive PTG indicates a patient is cooler than the control temperature and a negative PTG occurs when the patient temperature is higher than the control temperature. Based on the magnitude and sign of the PTG, a software look-up table is used to find the percent heat required. The percent heat is then converted to the appropriate number of bargraph steps and then the selected amount of heat is output by the same process used in the manual mode.

A hardware circuit is used to interrupt the microcontroller once every cycle of the ac power line. During the interrupt routine, two registers are decremented to keep track of the heater "On" and "Off" cycles. One register is used for counting the total interval (60) and another register is loaded on every sixtieth count with the number of heat cycles to be output. A flag is set whenever this register is not zero, the heat is "On" only when this flag is set.

The operation of the heat control software and the heat output hardware are repeatedly tested during operation of the warmer. An opto-isolator connected with a series resistor directly across the heater terminals is used to monitor heater power. The output of the opto-isolator is fed into a Schmitt trigger, which outputs directly to an input port of the microcontroller. Therefore, the microcontroller can verify if the heat is actually on when it is supposed to be on. If not, a system fail alarm will be activated. Approximately every three minutes, an external hardware network (safety circuit) signals the microcontroller to switch "Off" the heat. This hardware also monitors the output of the Schmitt trigger (heater status line). If the heater power is not switched "Off" after a short delay, the hardware circuit will de-energize the "safety" relay to switch "Off" heater power and also initiate an alarm which cannot be silenced without switching the power "Off".

Service Features
The electronic controller assembly is easily removed for servicing or calibration. This controller contains all the circuitry and components except for the heater, alarm lamps, and observation lamps.

All indicators and the audio alarm are activated on power-up for operator verification of proper display operation. These can also be activated by depressing the alarm silence switch for 2 seconds. In addition the software revision number and the line frequency are displayed.

Test points on the printed circuit boards are accessible for troubleshooting and calibration without removal of the boards. In addition integrated circuits with 24 pins or more have sockets to aid in troubleshooting and repair.

Software routines are built into the warmer to provide test functions, to aid in troubleshooting, calibration, and operation verification. These test routines are activated using a DIP switch located on the control board. Some of the test routines can be activated using the display panel.

Calibration may be verified on the controller display without disassembly. A high calibration point and a low calibration point are displayed when the service test switch is pressed for 2 seconds.

Line voltage is monitored by the warmer and fluctuations of ± 10% from nominal voltage are compensated for so that heat output is held constant. If the voltage exceeds ± 17.5% from nominal an alarm is activated and the heater switches off.

Self Test Functions
The following text is a description of the self test functions performed by the infant warmer. If an error results on any of the power-up or on-line tests then the error number will be displayed on the elapsed time display in the format E ##. The high priority alarm (System Failure LED) will be "On" and cannot be silenced. Power must be switched "Off" to reset this alarm.

Power Up Testing
On power up the following tests are performed.

1. Instruction Test (Error #01)

Selected instructions are tested and verified operational.

2. Checksum (Error #04)

The hex values of Eprom locations from 0000 to 1FFD are added together and a 2 byte sum is stored. Eprom locations 1FFE and 1FFF contain a 2 byte number which when added to the calculated checksum should total zero.

3. RAM Test (Error #05)

Rams 10 through 7F are tested with patterns of 00, FF, AA, and 55.

4. Test Port 1 Lines (Error #06)

The port one I/O lines are tested to verify they can be toggled.

On Line Testing
The following tests are run during the normal operation of the software. An error on any of these tests results in a System Failure alarm.

1. ADC Calibration Test (Cal High Error #02, Cal Low Error #03)

Verifies that readings of the precision calibration resistors are within 0.3 degrees of the nominal values.

These readings can be checked by depressing the hidden switch on the display panel (located directly above the alarm silence switch) for 2 seconds.

After 2 seconds the displays should indicate as follows:

Patient Temperature is 25.0 ± 0.3 degrees.
Control Temperature is 37.9 ± 0.3 degrees.

2. Hardware Triac Test

A circuit independent of the microcontroller monitors that the micro can switch the heat "Off". Every 3 minutes 24 seconds in 60 Hz operation (4 minutes and 5 seconds for 50 Hz operation) a request is made to the micro to switch the heat "Off". If the heat does not go "Off", a hardware latch is latched and a relay contact is opened so there is no heat. This verifies that the triac is not shorted and that the micro is still able to control the heat. This failure does not display an error number because it is not controlled by the micro but will cause the software triac test to fail when heat is called for by the program.

3. ADC Converter not Converting (Error #07)

Verifies that the ADC conversion complete occurs within 1 second.

4. Hardware Triac Timer Not Running (Error #08)

Verifies that the request from the hardware triac test circuit occurs within 256 seconds.

5. Software Triac Test (Error #09)

The heater status line is checked to verify that the heat is "On" when the micro is switching it "On". This verifies that the triac is not failed open.

6. Line Voltage Out of Range (Error #10)

Verifies that the line voltage is within the range of 82.6% to 117.4% of nominal input voltage. (95v to 135v, for 115v units)

Diagnostic Testing
Diagnostic testing can be accessed by one of the following:

1. Depressing and holding the Apgar Tones switch while powering up unit. This causes the unit to cycle in the self test loop until power is removed. See Self Test Loop in step 2e.

2. Selecting one of the test positions on the 4 position "Dip" switch located on the control board. Following is a description of the functions of the "Dip" positions:

a. Switches All Open ("Off") Normal Operating Position (00).

b. Switches 2,3,4, Closed ("On") and Switch 1 Open ("Off") Hardware Triac Test (0E)

This mode can be used to test the hardware triac test circuit. The heat is switched "On" all the time to simulate a failed triac. The elapsed time display will start at zero on power up and display the elapsed time. At about 3 minutes 24 seconds for 60Hz operation (4 minutes and 5 seconds for 50 Hz operation) a failed triac should be detected. The high priority audio alarm should come "On" and the heat should go "Off". The heat indicator LED located on the control board should be checked to verify that the heat is "Off".

c. Switches 1,2,3, Open ("Off") and Switch 4 Closed ("On") ADC Calibration (08)

The system displays the actual ADC counts on the elapsed time display, the patient temperature on the patient display even if outside of the normal displayed range, and the % of nominal line voltage on the control display. This position is used for calibrating the analog to digital converter and the line voltage compensation circuit.

d. Switches 1,2,4 Open ("Off") and Switch 3 Closed ("On") Alarm Calibration (04)

All segments of all LEDS are lit. The heater, overhead alarm lamps, and the observation lamp are on. The audio alarm emits a steady low priority alarm sound. The 2 kHz alarm frequency can be adjusted using this mode.

e. Switches All Closed ("On") Self Test Loop (0F)

In this mode the unit cycles through a display test, checks ADC calibration, cycles the heater, alarm lights, and observation lights, and steps through the tests described in power up testing. It also monitors the touch switches and sounds the critical alarm while any switch is depressed. If any error occurs the error number will be displayed on the elapsed time display and the critical alarm will sound for two seconds. The program will then continue to loop through this test, even if the 4 DIP switches are returned to "Open" ("Off").

If the test loop is entered on power up by depressing the Apgar Tones switch the program will loop until an error is detected. If an error is detected the unit will then stop the test loop, the error code will be displayed in the elapsed time display, and the critical alarm will sound. The power must be switched "Off" to exit this mode.

Self Test Loop
The unit cycles in the following loop until the power is removed.

Power up tests performed:

Instruction test	("Error" #01)
Check calibrate high	("Error" #02)
Check calibrate low	("Error" #03)
Checksum	("Error" #04)
Ram test	("Error" #05)
Test port 1 lines	("Error" #06)
Check if ADC is converting	("Error" #07)

Display loop test:

Seven Seg Display's	Bar Graph Segments	Alarm LEDs	Mode LEDs	Heater and Lights
All 1's	1,11	Probe fail	Servo	"On"
All 2's	2,12	Pat temp	Servo	"Off"
All 3's	3,13	Sys fail	Servo	"On"
All 4's	4,14	Heater "Off"	Manual	"Off"
All 5's	5,15	Reset timer	Manual	"On"
All 6's	6,16	Spare LED	Manual	"Off"
All 7's	7,17	All "Off"	Apgar	"On"
All 8's	8,18	All "Off"	Apgar	"Off"
All 9's	9,19	All "Off"	Apgar	"On"
All 0's	10,20	All "Off"	All "Off"	"Off"
All "Off"	All "Off"	All "Off"	All "Off"	"Off"

The unit returns to start of self test loop.

Error Codes

Error	Description	Possible Cause
#01	Instruction test fails	Microprocessor 8031 defective
#02	Calibrate high fails	ADC calibration Cal high resistor defective
#03	Calibrate low fails	ADC calibration Cal low resistor defective
#04	Checksum fails	Eprom defective Microprocessor 8031 defective
#05	Ram test fails	Microprocessor 8031 defective
#06	Port 1 lines	I/O expander 8243 defective Microprocessor 8031 defective
#07	ADC not converting	A/D Converter ADC3711 defective Voltage Reference LM10 defective I/O expander 8243 #2 defective
#08	Hardware triac timer	Logic gate 4020B defective IC in triac test area defective
#09	Heat not controlled	Heater triac defective Microprocessor 8031 defective Heater opto-isolator or driver defective
#10	Line voltage out of range.	Line voltage compensation pot. on power supply board not calibrated.

C. Display Board

This is a functional description for the Infant Warmer System Display Board Part No. 0631-5031-700. Refer to Schematic No. 0676-0325-000 for a detailed circuit diagram.

The display board provides the interface between the operator and the control system. It displays the status of the unit, the patient status, and can also be used as a diagnostic aid. The operator controls the system by depressing the various switches on the front display. Operation of the display board is simplified with the use of two ICs: the 8243 I/O expander which is used in conjunction with the switches; and the MM5451 (or MM5450) driver used in conjunction with the LED display.

Switch Decoding
The I/O expander, U1, is always enabled in the read mode because its' sole purpose is to detect switch depressions. The 8243 is activated by the microcontroller sending a "Low" signal on the Chip Select (CS) line. A control word (4 bits) is latched from the input port 2 on the "High" to "Low" transition of the PROG pin. The word is decoded as follows.

P23	P22	Instruction Code	P21	P20	Address Code
0	0	Read	0	0	Port 4
0	1	Write	0	1	Port 5
1	0	Or	1	0	Port 6
1	1	and	1	1	Port 7

As soon as the read instruction and the port address are decoded the corresponding port lines are set to a "High" impedance state and the input buffers within the 8243 are switched "On". When a switch is depressed on the display, the respective line switches "Low" and is loaded into the input buffer. The "Low" to "High" transition on the PROG line terminates the read instruction and transfers information back to port 2. When the microprocessor sets the CS line "High" the 8243 is disabled.

LED Display Driver
The LED display, driver, U2, controls the LED displays. The displays are multiplexed with a duty cycle of 20% and a refresh rate of 60 hertz. Data is input to pin 22 synchronously with the clock (pin 21). The first "1" bit activates the driver and 35 data bits will follow. After the 35th bit is loaded the data is latched to provide direct output. Note that a logic "High" at the input switches the output "Low" and switches "On" the LED connected to the output (output is inverted).

Brightness Adjust
R9 is used to adjust the output current from U2 and in turn change the brightness of the LEDs. R9 is adjusted to produce 3.30 ± 0.10 volts across R10 (3.3V/221 ohms = 15ma). C6 is used to prevent oscillations at pin 19.

Multiplexing of Displays
Since there are not enough data bits to drive the entire display, the displays are divided into four sections. Bits 1-28 are used to supply the necessary information to each section. Bit 29 is unused. Bit 30 is tied to a 221 ohm ± 1% resistor which is used for calibration. Bits 31-34 select which channel of the display is activated by switching ON a Darlington transistor. The Darlington provides a large gain so that a small drive current will sustain the large current draw from the LEDs.

A string of 35 zeroes are sent on the data line every fifth update cycle. The driver has a serial input and does not have a master reset. This string of zeroes resets the driver in case an extra pulse was entered by a noise spike.

The basic circuit for one LED segment consists of the 5 volt LED supply (reduced to 4.3 volts by a series 1N4001 diode,) a Darlington switch to enable the supply to the LED group, and the MM5451 driver to select a low voltage return for the segment (if selected).

2/Specifications

All specifications are subject to change without notice.

2.1 Electrical

Power Requirements
Model 3000

0305-0402-910	
120 V 50/60 Hz Models 115V ~ ± 10%	5.7 Amps
0305-0402-911	
220 V 50/60 Hz Models 220V ~ ± 10%	3.0 Amps
0305-0402-912	
240 V 50/60 Hz Models 240V ~ ± 10%	2.7 Amps
0305-0402-913	
100 V 50/60 Hz Models 95V ~ ± 10%	6.4 Amps

Model 3300

0305-0403-910	
120 V 50/60 Hz Models 115V ~ ± 10%	5.7 Amps
0305-0403-911	
220 V 50/60 Hz Models 220V ~ ± 10%	3.0 Amps
0305-0403-912	
240 V 50/60 Hz Models 240V ~ ± 10%	2.7 Amps
0305-0403-913	
100 V 50/60 Hz Models 95V ~ ± 10%	6.4 Amps

These models were designed to conform to IEC 601-1 requirements.

Nominal Power Consumption
500 watts at maximum % power setting.

Heater Output
440 watts ± 5% at maximum %power setting.
Average Energy at Mattress Level is 35 mw/cm2 at Maximum % power setting

Recommended Bed Level (Model 3000)
27 inches ± 2inches from the bottom of heater module.

CAUTION: For the Model 3000 Infant Warmer System the height of the bed should be 27 inches ± 2 inches from the bottom of the heater module for proper heating and temperature control.

Line Voltage Compensation
Input voltage is monitored and the heat output is adjusted to compensate for variations of line voltage.

Circuit Breaker
Rated Current: 7 Amps
Trip Point: 9.45 Amps Minimum
Type: Manual Resetting
Model: Airpax Snapak

Chassis Leakage Current
Less than 8 microamperes on 100v and 120v units (18 microamperes on 220v and 240v units) measured at the patient probe connection.
Less than 90 microamperes on 100v and 120v units (180 microamperes on 220v and 240v units) measured at an exposed metal surface.

2.2 Controller

Electronics
Microprocessor based control system. Self test functions are performed at power up and during normal operation.

Power Control Method
Proportional heat control with zero voltage switching to minimize radiated and conducted EMI.

Examination Light
Nominal illuminance output: 100 foot candles at center of mattress.
Estimated lamp life: 3,000 hours

Temperature Sensing System
Probe Model Number: LA003
Range: 22-42 degrees C
Accuracy: ± 0.3 degrees C
Resolution: ± 0.1 degrees C
Probe interchangeability: ± 0.1 degrees C

Elapsed Timer
60 minute elapsed timer with hold mode and Apgar tones.

Manual Mode
Manual mode heat selector range: 0 to 440 watts in 20 increments (5% per step).

Servo Mode
Servo control range 35.0 to 37.5 degrees C in increments of 0.1 degrees C.

2.3 Alarms

Multiple audio tones
1. Operator prompt tone
2. Alternating single tone
3. Alternating two tone

Overhead Alarm Light
Large alarm light located on the front of the heater assembly for easy visual identification.

Probe Failure Alarm
Activates when the skin temperature probe fails electrically open or short, or is disconnected from the warmer. The alarm is only active in the servo mode. The heater is turned off and the patient temperature display flashes HH.H when this alarm condition exists.

Patient Temp. Alarm
The Patient Temp. alarm activates in the servo mode when the difference between the patient temperature and the control temperature is greater than one degree C. The alarm cancels when the patient temperature returns to within 0.8 degrees C of the control temperature.

System Failure Alarm
The system failure alarm activates and turns the heater off if the analog to digital converter calibration drifts by more than 0.3 degrees C., the heater triac fails, the microprocessor fails, or the self check functions fail on power-up. This alternating two tone alarm cannot be silenced.

Heat Off Alarm
The LED activates whenever the heater is in the X-ray position. The audio alarm activates after 5 minutes in the X-ray position.

Check Patient Alarm
Activates in the manual mode if the heater has been energized at greater than 25% heat for 12 continuous minutes. In the servo mode the alarm activates when the heater has been at full power for 12 continuous minutes.

Power Failure Alarm
The power failure alarm activates if line power is interrupted. A rechargeable maintenance free ni-cad battery powers the audio alarm and the microprocessor. If power is restored within 10 minutes the mode of operation and the set point are recalled.

2.4 Environmental

Operating temperature range: 10 to 40 degrees C
Storage temperature range: -25 to 60 degrees C
Humidity: 0 to 95%

2.5 Mechanical (without accessories)

Dimensions:

Height: 73in. (185cm.)
Depth: 39.5in. (100cm.)
Width: 24.5in. (62cm.)

Mattress: 18.2 × 25.2 inches (46.2 × 64.0 cm)

Tilting Positions ± 10 degrees

Weight:
Model 3300 – approx. 210 pounds (95 kg.)
Model 3000 – approx. 165 pounds (75 kg.)

Casters: 5 inch diameter, 2 locking, 2 non-locking

2.6 Accessories

Oxygen yoke and regulator:
Pin indexed yokes accommodate two E size oxygen cylinders
Diss oxygen fittings
52 ± 2 psig regulator
Cylinder pressure gauge, 0 to 3000 lbs. (0 to 210 kg/cm2)

Three drawer storage accessory:
Drawers 15 × 15.5 × 4 inches
(930 cubic inches per drawer)
38 × 39 × 10 cm. (14,820 cubic centimeters per drawer)

Rail mounted accessories:

Monitor shelf: Dimensions 12 × 26 inches
(30 × 66 centimeters)
Load limit: 50 pounds (22 kg)
Instrument shelf: Dimensions 12 × 12 inches
(30 × 30 centimeters)
Load limit: 20 pounds (9 kg)

WARNING: Overloading the shelves can affect the stability of the unit.

Oxygen flowmeter w/DISS fittings (0 to 15 LPM)

Air flowmeter w/DISS fittings (0 to 15 LPM)

Manometer (-20 to +100 centimeters of water)

IV pole

Vacuum manifold w/DISS fittings

Gas manifold w/ 1/8" npt fitting

3.5 inch utility post

22 inch utility post for mounting infusion pumps, humidifiers, proportioners, ventilators etc.

Ventilator mounting accessory

3/Setup and Checkout Procedure

3.1 Setup

Refer to the setup instructions shipped with the Infant Warmer System for initial unpacking and setup of the unit after shipment.

Inspect the Model 3000 and 3300 Warmer Systems and all accessory items after removal from the shipping containers for any signs of damage that may have occurred during shipment. File a damage claim with the shipping carrier if damage has occurred. Also confirm the presence of all accessory items as listed on the packing slip.

3.2 Checkout Procedure

WARNING: Do not perform the Check-Out Procedure while a patient occupies the Infant Warmer System.

Perform the Checkout Procedure before each use on a patient. Refer servicing to qualified service personnel if the unit does not perform as specified. Refer to the Troubleshooting Guide and the Disassembly and Repair Sections if the unit fails any steps of the Checkout Procedure.

A. Mechanical Checks (Model 3000 and 3300)

Overall Appearance

1. Disconnect the power cord for the Infant Warmer System for the mechanical checks portion of this procedure.
2. Check the overall appearance of the Infant Warmer System. There should be no obvious damage.
3. Place the Infant Warmer System on a level surface. Check that all four casters are in firm contact with the floor and that the warmer moves freely.
4. Lock the two front casters and check that the warmer is held in place.
5. Examine the power cord for damage. Replace the power cord if damage is evident.

CAUTION: Insulation on electrical wiring can deteriorate with age. Check for brittle or deteriorated insulation on power cord and all other electrical wiring.

Heater Rotation

1. Rotate the heater to the X-ray position and back to the normal position. Check for smooth rotation.

Mechanical Checks (Model 3300)

1. Check the operation of the bed sides. The bed sides should operate smoothly.
2. Check the operation of the tilt mechanism. Verify that the bed platform operates smoothly and locks in any position.

Optional Accessory Checks

Check that all accessories are mounted securely to the uprights.

Oxygen Yoke and Regulator Checks

1. Check that all oxygen cylinders are mounted securely.
2. Check that the output from the regulator is 52 ± 2 psig with a 500 cc flow. If adjustment is required refer to section 4H.

B. Control Unit Checks

1. Connect the Infant Warmer power cord to an appropriate power source (see rating plate for proper voltage etc.). Switch the power "On" and verify the following:

a. The alternating two tone audible alarm sounds and all displays and indicators are lit for approximately two seconds.

Note: During this time the controller also performs self check functions. If the controller detects a failure the alarm stays on and service is required.

b. The manual mode indicator is lit.
c. An operator prompt tone sounds and the % power display flashes.

2. Adjust the heat output with the increase and decrease touch switches to the high and low limits as indicated by the % power display.
3. Connect the skin temperature probe to the Infant Warmer System.
4. Press the mode touch switch to place the warmer in the servo mode and verify the following:

Note: An alternating two tone alarm and a flashing overhead alarm light may occur here if the skin temperature probe is below 30 degrees C. Warm the probe with your fingers or silence the alarm.

a. The servo mode indicator is lit.
b. An operator prompt tone sounds and the control temperature display flashes 36.5 degrees C.

5. Press the increase touch switch and verify that the maximum servo control temperature attainable is 37.5 degrees C.

Note: A patient temperature alarm occurs if the difference between the patient temperature and the control temperature is greater than one degree C.

6. Press the decrease touch switch and verify that the minimum servo control temperature attainable is 35.0 degrees C.
7. Disconnect the skin temperature probe. Verify the following:

a. The probe failure indicator light is lit.
b. There is an alternating two tone alarm.
c. The overhead alarm light is flashing.
d. The patient temperature display flashes "HH.H".

8. Press the alarm silence touch switch and verify the following:

a. The probe failure indicator light is lit.
b. The alternating two tone alarm is silenced.
c. The overhead alarm light is lit.
d. The patient temperature display indicates "HH.H".
e. After one minute the alternating two tone alarm sounds, the overhead alarm flashes and the patient temperature display flashes HH.H.

9. Switch to the manual mode and set the heat at 25% power.

Elapsed Timer Check

1. Press the start/hold switch to activate the elapsed timer. Verify that the timer starts operation.
2. Press the on/off switch for the Apgar tones. Verify that the indicator light for the Apgar tones is not lit.
3. Press the on/off switch for the Apgar tones again. Verify that the indicator light for the Apgar tones is lit.
4. Press the start/hold touch switch. Verify that the present elapsed time is held.
5. Press the start/hold touch switch and verify that the timer updates to the current elapsed time and the Apgar tones continue to sound at the specified times (at 1 minute and at every 5 minute interval after the elapsed timer is started).
6. Press the reset touch switch and verify that the timer indicates 00:00. If the elapsed timer is not used for one minute the display is switched off.

Examination Light Check

1. Press the Light "On"/"Off" touch switch. Verify that the examination light functions.

Interlock Switch Check

1. Place the warmer in the manual mode at 25% power output.
2. Rotate the heater assembly to the X-ray position. Verify that the heater off indicator light is "On" and the % power display indicates 0% heat.
3. Rotate the heater assembly to the normal operating position. Verify that the heater off indicator light is "Off" and the % power display indicates 25%.

Display and Alarm Check

1. Press and hold the alarm silence switch for more than 2 seconds, then check for the following:

a. Every segment of each digital display should be lit. All segments should be of uniform brightness and visible under ordinary room lighting conditions.
b. All LED indicators should be lit.
c. The warbling two-tone audio alarm should be on.

Battery Test and Memory Test

The battery is charged in normal operation by a trickle charge current from the regulated 9 volt supply. If the battery is discharged it must be recharged before allowing a patient to occupy the Infant Warmer. The battery may be recharged by placing the unit in the manual mode at a 0% heat setting. If the battery is defective, replace it. Replacement of the battery is recommended every two years. There is no maintenance required for the battery.

Note: The battery must be fully charged to pass the 10 minute test or partially charged to pass the two minute test.

1. Disconnect the patient temperature probe.
2. Place the Infant Warmer in "servo" mode.
3. Silence the probe failure alarm.
4. Set the control temperature at 37.0 degrees C.
5. Remove the Infant Warmer power plug from the power source for two minutes. Do not switch the power "Off". The power failure alarm should sound for two minutes.

   Note: If the power failure alarm is tested for 10 minutes, the Infant Warmer must be connected to the correct power source and operated for 24 hours to recharge the battery before allowing a patient to occupy the Infant Warmer.

6. Reconnect the Infant Warmer to the power source. Verify the following:

a. The Infant Warmer is operating in the servo mode.
b. The control temperature is 37.0 degrees C.
c. The audio power failure alarm is off.

Calibration Check

1. Press and hold the hidden control panel switch (directly above the alarm silence switch).
2. After 2 seconds the displays should indicate as follows:

a. Patient Temperature displays 25.0 ± 0.1 degree.
b. Control Temperature displays 37.9 ± 0.1 degree.
c. Elapsed Time displays % nominal line voltage ± 2%.

Note: Line voltage may be measured on terminals marked with the phase symbol and "n" on the power supply board. Measure the voltage with the heat off. The % of line voltage can be calculated by:

(Measured Voltage / Nominal Voltage) × 100 = % of Nominal Line Voltage

Nameplate Voltage	Nominal Voltage
100	95
120	115
220	220
240	240

4/Calibration and Adjustments

CAUTION: Use the Static Control Work Station (Part No. 0175-2311-000) to help ensure that static charges are safely conducted to ground. The Velostat material is conductive. Do not place electrically powered circuit boards on it.

Note: The audio alarm will sound for about 2 seconds whenever powering up the unit.

Note: Warm up the unit for 5 minutes before making these adjustments.

A. Control Unit Access

1. Disconnect the power cord for the Infant Warmer System from the wall outlet.
2. Remove the mounting screws for the back panel.

B. Power Supply Board Voltage Checks

1. Set the test switch (S1) located on the control board to the following test positions:

   Switch #1,#2,#4 Open ("Off")
   Switch #3 Closed ("On")

2. Connect the controller assembly to the power source (listed voltage ± 10%), and switch the Infant Warmer "On".
3. Check that all display segments are "On", the observation lamp is "On", the alarm light is "On", the heater radiates heat, and a continuous alarm tone sounds.
4. Check that the following D.C. voltages are present at the test connector (T1) located on the control board. Voltages should be within the tolerances specified:

TP7 Ground (common)
TP3 (9.0 Vdc ST.) +9V ± 0.2V (adjust R4 on P.S. Bd.)
TP4 (5.0 Vdc LEDS) +5V ± 0.2V (replace P.S. Bd.)
TP5 (5.0 Vdc ST.) +5V ± 0.2V (replace P.S. Bd.)

C. Display Brightness Check

Note: The display brightness is precalibrated at the factory and should only require adjustment if replacing a component on the display board.

With the test switches set as follows:

Switch #1,#2,#4 Open ("Off")
Switch #3 Closed ("On")

Check that all the displays are lit and are of uniform brightness. If the displays are acceptable proceed to Section D. If the displays are not illuminated adequately proceed with the adjustment procedure.

Adjustment Procedure

CAUTION: The back panel and display panel may drop down when the bottom cover mounting screws are removed. Be sure to secure the panels with tape before disassembly.

1. Set the test switch (S1) located on the control board to the following test positions:

   Switch #1,#2,#4 Open ("Off")
   Switch #3 Closed ("On")

2. Tape the display panel and back panel to the top cover.
3. Remove the four outside corner mounting screws from the bottom of the display panel. Do not remove the two inside mounting screws.
4. Connect a digital voltmeter across R10 located on the bottom edge of the display board.
5. Adjust R9 on the display board until the voltage across R10 is 3.30V ± 0.2V.
6. Verify that all segments of all displays are lit and are of uniform brightness.

D. Alarm Volume Adjustment

Note: The alarm volume and frequency are precalibrated at the factory and should only require adjustment if replacing a component on the control board.

1. With the test switches set as follows:

   Switch #1,#2,#4 Open ("Off")
   Switch #3 Closed ("On")

2. Ensure the alarm tone and volume are adequate. Verify that the audio alarm level is adequate in a location with a background noise level of 55 dBA max. If the audio alarm level is acceptable go to step E. If the audio alarm level is unacceptable proceed with the adjustment procedure.

Adjustment Procedure

3. Verify the frequency output at U7 pin 9 is 2 kHz ± 0.1 kHz. Adjust R38 on the control board as required.

   Note: If test equipment is not available for checking the 2 kHz frequency, adjust R38 for maximum sound level.

4. Verify that R37 on the control board is set fully CCW (maximum volume).

E. Analog to Digital Converter (ADC)

Note: The following resistance values are available on the Temperature Simulator and the switch positions are listed in parentheses.

1. Switch the power switch "Off".
2. Set the control board test DIP switch (located on the upper edge) to the calibration positions as follows:

   Switch #1, #2, #3 Open ("Off")
   Switch #4 Closed ("On")

3. Connect a resistance of 5900 ohms ± 0.1% (I7) to the patient jack connector.

4. Switch the power switch "On" and allow the unit to stabilize for 5 minutes.

5. Verify that the ADC counts displayed on the elapsed time display is 1122 ± 2 counts. Slowly adjust R44 on control board as required.

6. Input resistance values into patient probe connector and verify patient temperature readings are within tolerances specified.

Resistance Input		Patient Temperature
5900 ohms ± 0.1%	(I7)	37.3 ± 0.1 degrees
7060 ohms ± 0.1%	(I3)	33.0 ± 0.1 degrees
6190 ohms ± 0.1%	(I11)	36.2 ± 0.1 degrees
5496 ohms ± 0.1%	(I2)	39.0 ± 0.1 degrees

F. Line Voltage Sensing

1. Use a DVM and measure the line voltage at the wall outlet.

2. Calculate the displayed % variance of the supply voltage from the rated nominal voltage using the following formula:

   (Actual line voltage / Nominal Voltage) × 100 = Displayed %

3. Slowly adjust R3 on power supply board as required until the control temperature display equals the calculated value for the supply voltage measured.

   Note: For domestic 115v units and an input voltage of 115 volts the reading on the control temperature display should be 100 % ± 2%.

4. Switch the power switch "Off".

G. Triac Safety Circuit Test

1. Place the individual test switches in the following positions

   Switch #1 Open ("Off")
   Switch #2, #3, #4 Closed ("On")

2. Switch the Infant Warmer power "On".

3. The front panel should display the following:

Pat. Temp.	EEE
Cont. Temp.	EEE
Elapsed Time	Running in Stop Watch Mode

4. Confirm that the heat indicator LED on the control board is lit.

5. Use a stop watch and verify that elapsed time display is accurate within ± 1 second per minute.

6. After approximately 3 minutes and 20 seconds (60 Hz models) or approximately 4 minutes (50 Hz models) a warbling alarm which cannot be silenced occurs.

7. The heat indicator LED on the control circuit board (viewed from the rear of unit) should be off.

8. Switch the power "Off" for the Infant Warmer and restore the test switch to the original configuration (all switches "Open").

H. Test Loop

Complete Unit Testing

1. Switch the power "Off".

2. Place the test switches on the control board in the test loop position. All 4 switches Closed ("On").

3. Switch the power switch "On".

4. Verify that the following sequence occurs:

a. For the first second:
   All segments, LEDS, and high-low alternating tone audible alarm are "On".
b. For the next second:
   High-low alternating tone audible alarm "On".
   Patient display – 60H for 60 Hz (50H for 50 Hz)
   Elapsed time display - software revision number.
c. The unit should then loop in the following order until the power is removed.

Seven Seg Display's	Bar Graph Segments	Alarm LEDs	Mode LEDs	Heater and Lights
All 1's	1,11	Probe fail	Servo	"On"
All 2's	2,12	Pat. temp.	Servo	"Off"
All 3's	3,13	Sys. fail	Servo	"On"
All 4's	4,14	Heater OFF	Manual	"Off"
All 5's	5,15	Reset timer	Manual	"On"
All 6's	6,16	Spare LED	Manual	"Off"
All 7's	7,17	All "Off"	Apgar	"On"
All 8's	8,18	All "Off"	Apgar	"Off"
All 9's	9,19	All "Off"	Apgar	"On"
All 0's	10,20	All "Off"	All "Off"	"Off"
All "Off"	All "Off"	All "Off"	All "Off"	"Off"

While looping through this test loop the program also does ram tests, memory checksum, and ADC calibration tests. If any error occurs an error number will be displayed on the Elapsed Time display and the critical alarm will sound for 2 seconds. The program will then continue to loop and display any additional error numbers. See Section 6 for error code descriptions.

5. Switch the power "Off".
6. Set control board test DIP switches to the normal operating position. (All "Open" or "Off")
7. Replace the back panel.

Separate Controller Unit Testing
Note: If required the controller unit can be tested separately from the warmer. The following test load may be connected in place of a heater assembly.

1. With the power "Off" connect the controller assembly to a test load as follows:
2. Between J17 pin 3 (phase) and J17 pin 1 (heater N) a 400 watt resistive load for 115 volts.
3. Between J17 pin 3 and J17 pin 2 (alarm light N) a 12 watt resistive load for 115 volts.
4. Between pin 1 and pin 3 of observation light connector a 50 watt resistive load for 12 volts.

I. Oxygen Regulator Check and Adjustment

Check that the output from the regulator is 52 ± 2 psig with a 500 cc flow. If adjustment is required perform the adjustment procedure.

Oxygen Regulator Adjustment Procedure

1. Disconnect the oxygen pipeline connection and remove the oxygen cylinders.
2. Remove the eight mounting screws for the Oxygen Yoke and Regulator Assembly and then remove the assembly.
3. Disconnect the copper tubing from the outlet port of the regulator.

   Note: The regulator must be reset to 52 ± 2 psig with a 500 cc flow passing through it.
4. Attach the special fitting and gauge assembly (Tool Number 0175-0543-000) to the regulator outlet. This special tool has a (0.025 in.) orifice to maintain a 500 cc flow for proper regulator adjustment.
5. Adjust the regulator adjustment screw until the pressure gauge reads 52 ± 2 psig.
6. Tighten the adjustment screw lock nut.
7. Remove the special fitting and gauge assembly.
8. Reconnect the copper tubing to the regulator outlet.
9. Place the Oxygen Yoke and Regulator Assembly in position on the Infant Warmer System and replace the eight mounting screws for the assembly.

J. Electrical Safety Check

Power Cord Inspection

1. Examine the power cord for damage and wear.
2. Examine the power plug for loose or bent pins. Replace the power cord if the cord or plug is damaged.

K. Ground Resistance Check

Perform a ground resistance check on the Infant Warmer System. Use a low range ohmmeter or electrical safety analyzer to measure the resistance between the ground pin on the line cord plug and the controller unit. Tug and flex each end of the power cord during the measurement. The ground resistance must be less than 0.15 ohms. Higher readings may indicate loose or oxidized connections in the power cord or the grounding circuits.

L. Leakage Current Tests

Use approved equipment and techniques to test the unit's leakage current and ground continuity.

There must be less than 8 microamps on 100v and 120v units (18 microamps on 220v and 240v export units) measured at the patient probe connection. Replace the patient probe if necessary.

There must be less than 90 microamps on 100v and 120v units (180 microamps on 220v and 240v units) measured at an exposed metal surface.

Measure the leakage current under all of the following wiring configurations:

1. Normal and reversed polarity.
2. Equipment power "On" and "Off".
3. Ground open and intact.

Make sure the heater is "On" full during the test. Set the unit for 100% power in the manual mode.

Use the leakage current tester OMP #0175-2284-000 and digital multimeter (DMM) for the following procedure:

1. Connection

a. Connect the device under test to the outlet on the leakage current tester.
b. Make sure the polarity switch on the leakage tester is in the "Off" Position then plug the line cord into a grounded 115-120 volt 60 Hz wall outlet (domestic unit only).
c. Connect the positive lead of the DMM to the positive + "Meter Out" output.
d. Connect the negative lead of the DMM to the negative − "Meter Out" output.
e. Set the DMM on the AC millivolt scale.
f. Connect one end of the test cable to the "External Ground" jack on the Leakage Current Tester.
g. Use the other end of the test cable (needle probe tip) to contact the exposed conductive surface of the device under test.

2. Normal Polarity Leakage Current Test

a. Place the polarity switch of the Leakage Current Tester in the "Normal" position. (This is in the grounded mode.)
b. Switch "On" the power of the device under test.
c. Measure the voltage on the DMM in millivolts. The millivolt reading is directly related to leakage current in microamps (i.e., 100 mv is equivalent to a leakage current of 100 microamps).
d. Push the "Ground Disconnect" switch to measure the ungrounded leakage current.
e. Switch the power switch of the device under test "Off" and then repeat steps 2c and 2d.

3. Reverse Polarity Leakage Current Test

a. Place the polarity switch on the Leakage Current Tester in the "Reverse" position. (This is the grounded mode.)
b. Switch "On" the power of the device under test.
c. Measure the voltage on the DMM in millivolts. The millivolt reading is directly related to leakage current in microamps, (i.e., 100 mv is equivalent to a leakage current of 100 microamps).
d. Push the "Ground Disconnect" switch to measure the ungrounded leakage current.
e. Switch the power switch of the device under test "Off" and then repeat steps 2c and 2d.

5/Disassembly and Repair

CAUTION: Use the Static Control Work Station (Part No. 0175-2311- 000) to help ensure that static charges are safely conducted to ground. The Velostat material is conductive. Do not place electrically powered circuit boards on it.

5.1 Heater Module Repairs

A. Heater Housing Disassembly (Figures 5-1 and 5-2)

1. Disconnect the Infant Warmer System Power Cord.
2. Rotate the heater to the X-ray position.
3. Remove the three Phillips head mounting screws for the back cover, and remove the cover.
4. Disconnect the heater housing connector. Squeeze the locking tabs on the rear of the plug to disengage the lock mechanism.
5. Remove the ground wire for the heater housing.
6. Remove the four mounting screws for the front cover plate and remove the plate.
7. Remove the four mounting screws for the front heater housing cap and remove the cap.
8. Push the heater assembly from the rear out the front of the heater housing. Avoid bending the rear portion of the heater assembly.
9. To ease disassembly the four mounting screws for the rear heater housing cap may be loosened. Do not remove the mounting screws.

Note: The heater, alarm lamp sockets, examination light socket, and wiring harness can be replaced when the heater assembly is removed.

B. Heater Replacement (Figure 5-2)

1. Hold each terminal on the heater rod to ensure no strain is placed on the element while removing the heater wire connection screws from both ends of the heater.
2. Remove the four mounting bolts for the front mounting plate and move it to the side.
3. Slide the heater rod out from the front of the heater assembly.
4. Slide the replacement heater rod in from the front of the heater assembly.
5. Hold each terminal on the heater rod to ensure no strain is placed on the element while replacing the heater wire connection screws on both ends of the heater.

Note: Position the wires at a 90° angle to the heater rod, to provide maximum wire spacing.

6. Place the front mounting plate in position and replace the four mounting bolts.

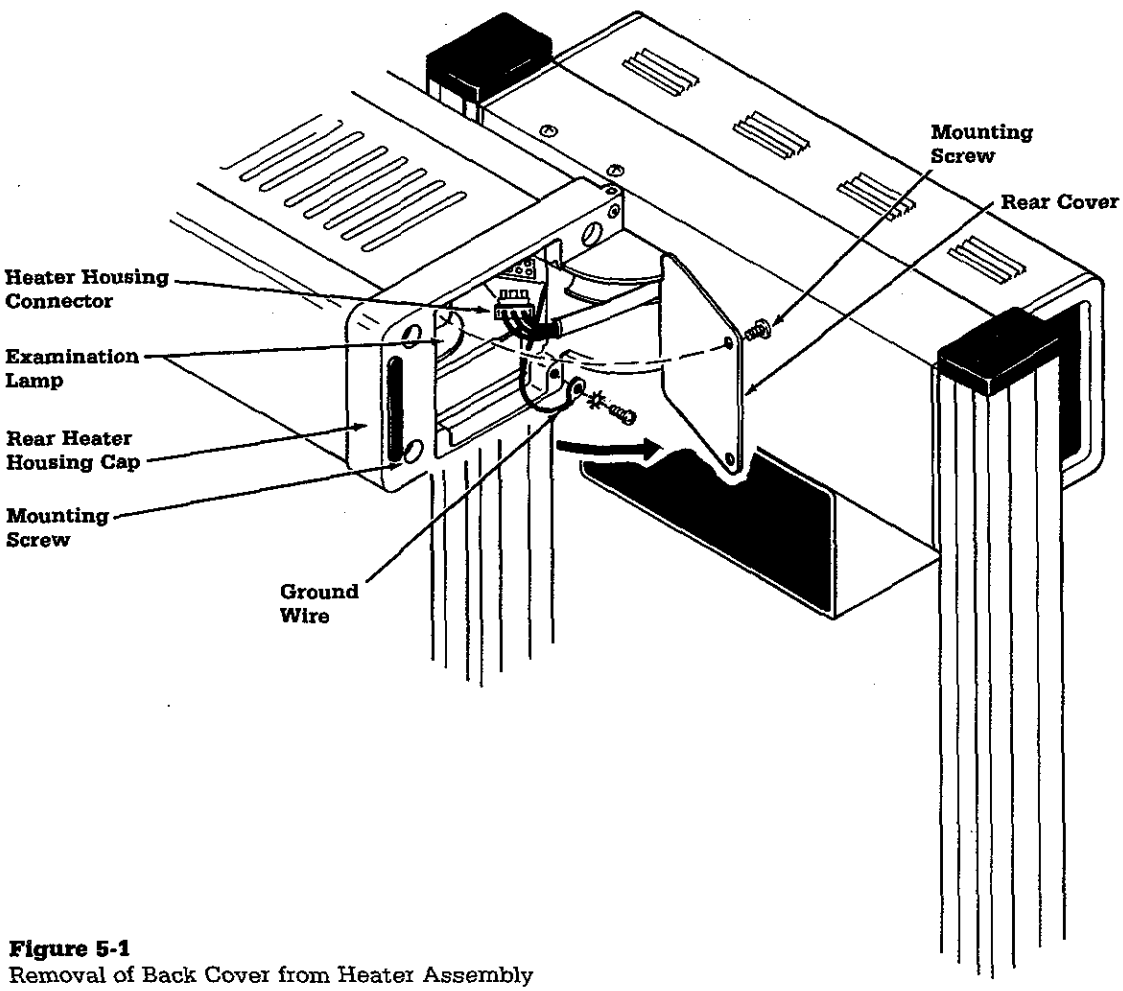

Figure 5-1
Removal of Back Cover from Heater Assembly

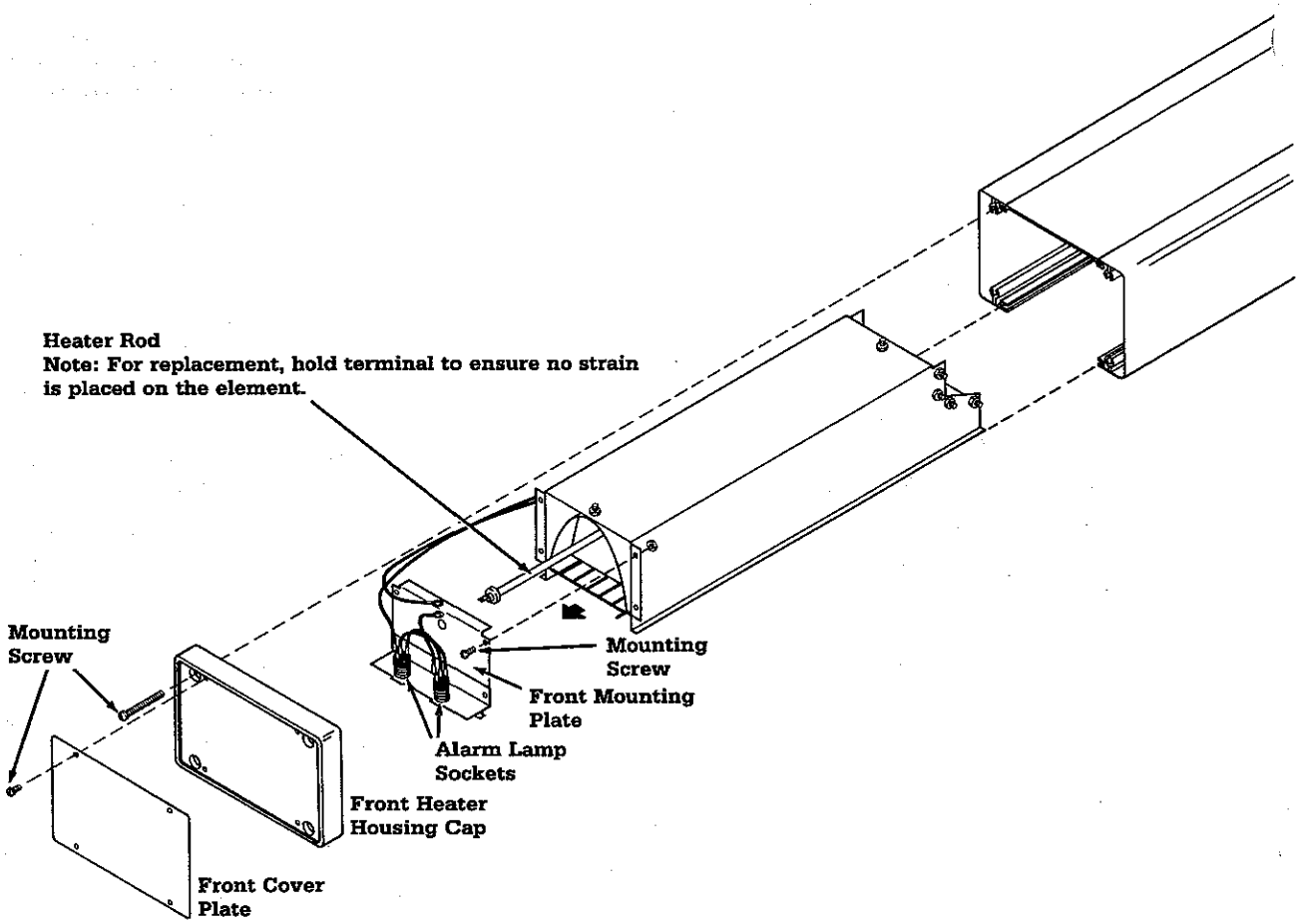

Figure 5-2
Heater Housing Assembly

C. Heater Housing Assembly (Figures 5-1 and 5-2)

1. Slide the rear section of the heater assembly into the front of the heater housing. Guide the rear panel as you push the assembly all the way in.

   Note: Avoid bending the rear panel of the heater assembly.

2. Attach the ground wire for the heater housing.
3. Reconnect the heater assembly wiring.
4. Place the front heater housing cap in position and replace the four mounting screws.
5. Tighten the four mounting screws for the rear heater housing cap if they were loosened.
6. Place the front cover plate in position and replace the four mounting screws.
7. Place the rear cover in position and replace the three Phillips head mounting screws.
8. Rotate the heater to the normal position.
9. Perform the Electrical Safety Procedures in Section 4 and the Checkout Procedures in Section 3.

D. Alarm Lamp Replacement (Figures 5-3)

Lamp: GTE Sylvania 120MB 6W, Ohmeda Part No. 0690-2100-315

CAUTION: Disconnect the Infant Warmer System power cord and allow the unit to cool before replacing the examination or alarm light.

1. Disconnect the Infant Warmer System power cord and allow the unit to cool for 10 minutes.
2. Use a Phillips head screw driver and remove the lens mounting screw located in the center of the alarm light.
3. Remove the lamp by pushing in and turning it counterclockwise.
4. Install the new lamp by pushing in and turning it clockwise.

   Note: When one lamp burns out it is recommended to replace both lamps. Replacing both lamps ensures maximum reliability.

5. Place the lens cover in position and secure it with the mounting screw.
6. Plug the power cord in and check for proper operation.

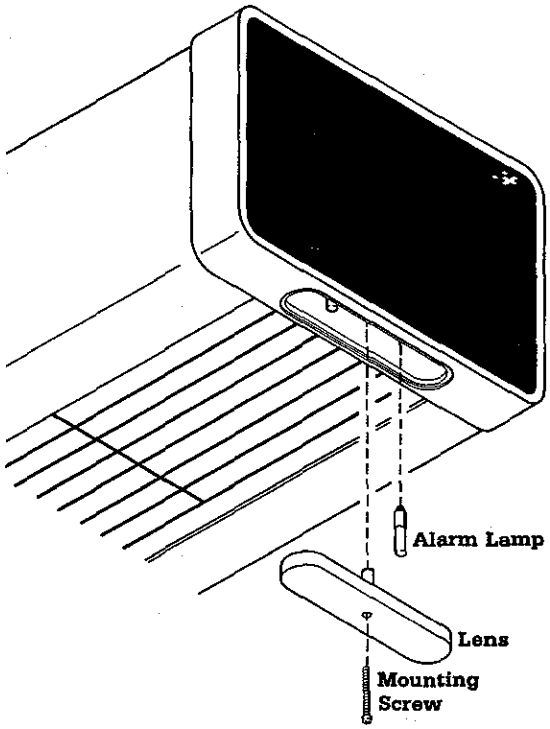

Figure 5-3
Alarm Lamp Replacement

E. Examination Lamp Replacement (Figures 5-4 and 5-5)

Lamp: GE EXZ(Q50 MR16/NFL) Ohmeda Part No. 0208-0521-300 or GE EXN(Q50 MR16/FL)

CAUTION: Disconnect the Infant Warmer System power cord and allow the unit to cool before replacing the examination light. The lamp normally operates at a high temperature.

Note: Do not touch the center glass bulb. This will reduce the life of the lamp.

1. Disconnect the power cord for the Infant Warmer System and allow the unit to cool for 10 minutes.
2. Rotate the heater assembly to the X-ray position.
3. Use a Phillips head screw driver to remove the three back panel mounting screws and slide the back panel to the right side.
4. While holding the lamp with one hand, use the other hand to pull the lever (next to the lamp) forward and remove the lamp.
5. Place the new lamp in position and push it into the lamp socket.
6. Replace the back panel and mounting screws.
7. Rotate the heater assembly back to the normal operating position.
8. Plug the power cord in and switch the examination lamp on. Check for proper operation.

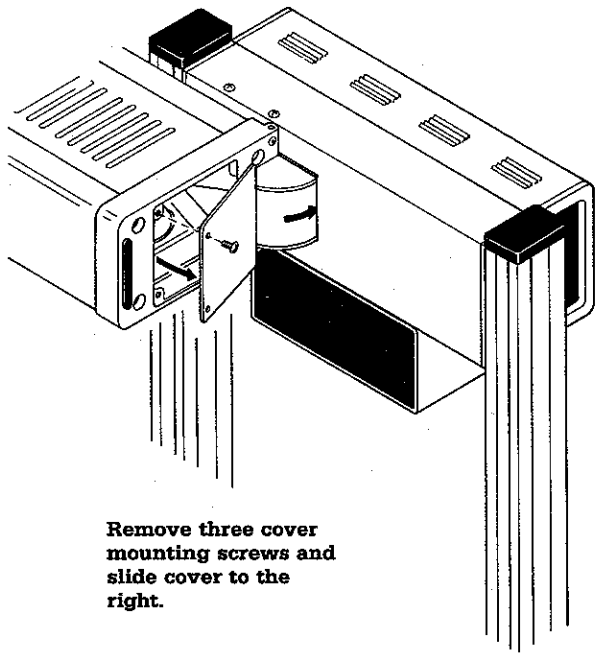

Figure 5-4
Examination Lamp Cover Removal

5.2 Control Module Repairs

CAUTION: Take static precautions for these procedures.

A. Control Module Removal (Figure 5-6)

1. Disconnect the Infant Warmer System power cord.
2. Remove the two inside mounting screws from the bottom of the display module.
3. Remove the two mounting screws for the control unit cover and remove the cover.
4. Disconnect the two connectors (J17 and the observation light connector) from the heater housing. Squeeze the locking tabs on the rear of the plug to disengage the lock mechanism.
5. Loosen the four mounting screws for the control unit and carefully remove the control module. Place the control unit on a flat surface so it rests on the transformers.

Hold lamp with one hand.
Pull lever with your other hand.

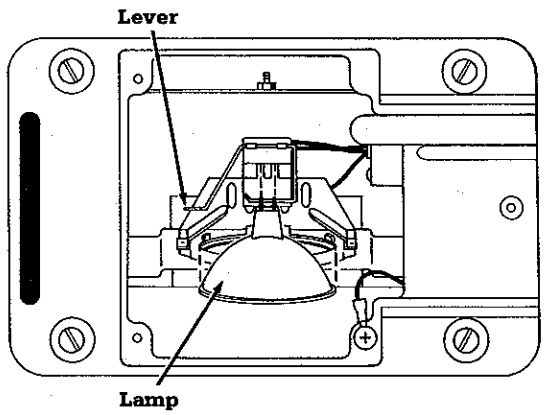

Figure 5-5
Examination Lamp Replacement

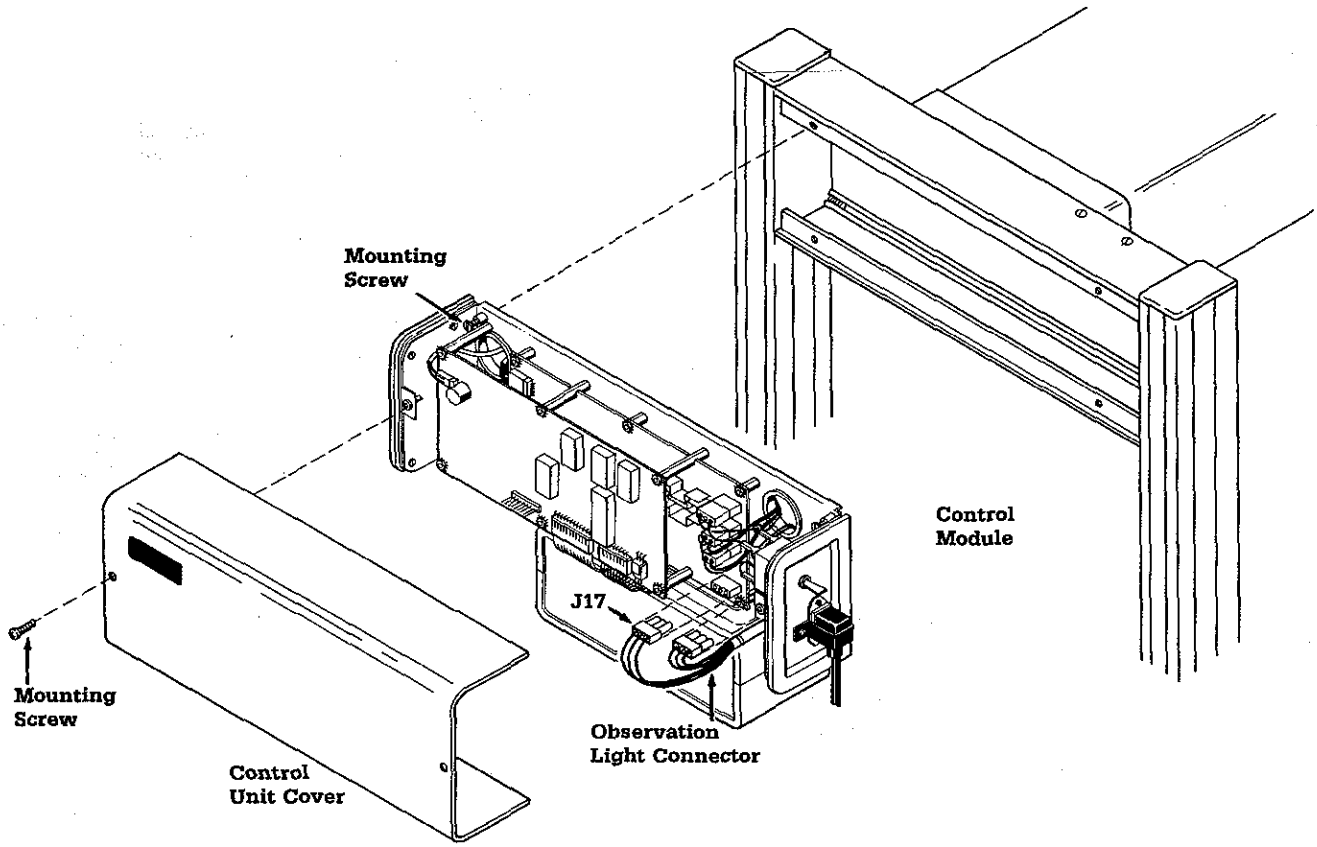

Figure 5-6
Control Module Assembly

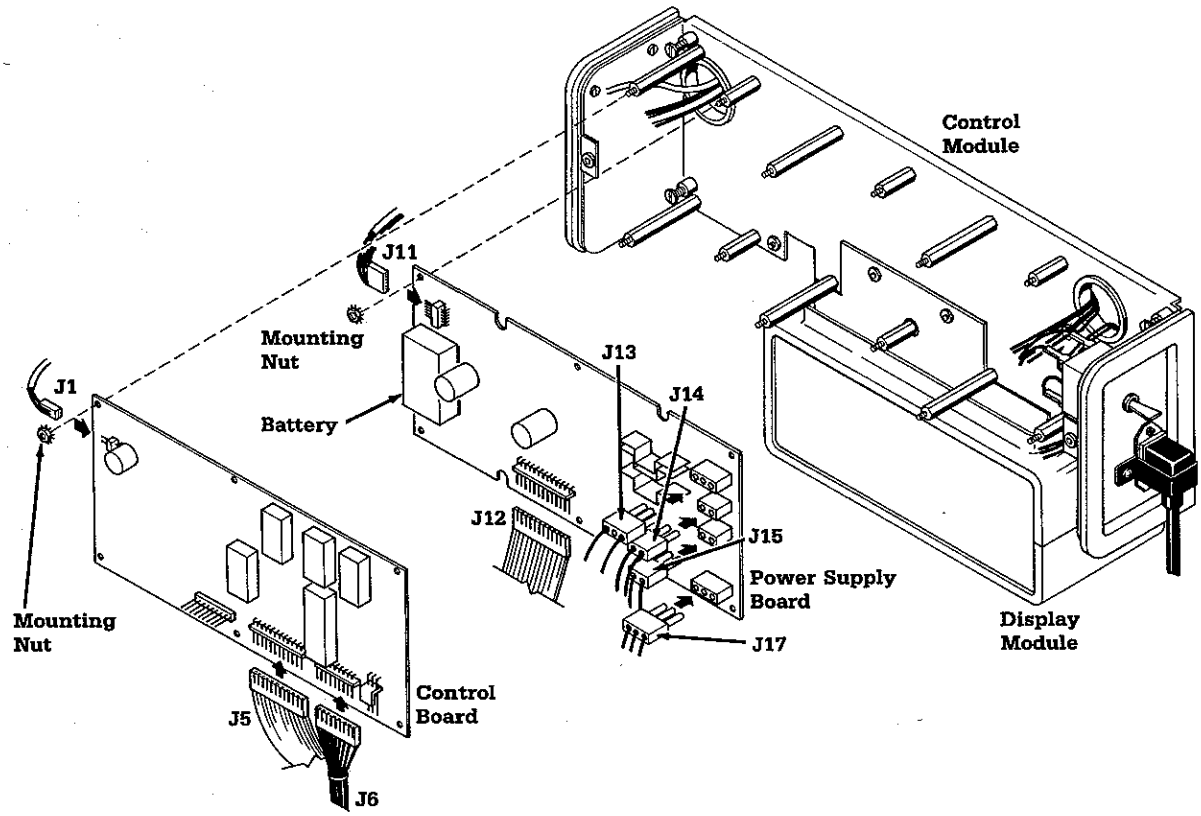

Figure 5-7
Control Board and Power Supply Board Assembly

B. Control Board and Power Supply Board Replacement (Figure 5-7)

CAUTION: Take static precautions for these procedures.

Control Board Removal

1. Disconnect the four connectors (J1, J5, J6, and J7) from the control board. Disengage the locking tab on the socket by inserting a small screwdriver between the tab and the rear of the plug.
2. Use a 5/16 inch socket to remove the six mounting nuts for the control board.
3. Remove the control board.

Power Supply Board Removal

Note: Remove the Control Board first.

1. Disconnect connectors J11, J12, J13, J14, J15, and J17 from the power supply board. For connectors J11 and J12, disengage the locking tab on the socket by inserting a small screwdriver between the tab and the rear of the plug. For connectors J13, J14, J15, and J17, squeeze the locking tabs on the rear of the plug to disengage the lock mechanism. J12 is a short connector which connects to J5 on the control board.
2. Use a 5/16 inch socket to remove the six mounting nuts for the power supply board.
3. Remove the power supply board.

Power Supply Board Installation

1. Place the new power supply board in position on the six mounting posts.
2. Replace the six mounting nuts for the power supply board.
3. Reconnect connectors J12, J13, J14, J15, and J17 to the power supply board. J12 is a short connector which connects to J5 on the control board.

Control Board Installation

1. Place the new control board in position on the six mounting posts.
2. Replace the six mounting nuts for the control board.
3. Reconnect the four connectors (J1, J5, J6, and J7) to the control board.
4. Perform the Electrical Safety Procedures in Section 4 and the Checkout Procedures in Section 3.

C. Display Module Disassembly (Figures 5-8 and 5-9)

CAUTION: Take static precautions for these procedures.

1. Remove the 4 bottom cover screws from the Display Module.
2. Slide the bottom cover with the display board from the top cover.
3. Slide the display board out of the bottom cover.
4. Disconnect the ground wires from the bottom cover.
5. Disconnect the 12 pin connector (J22) from the display board. Disengage the locking tab on the socket by inserting a small screwdriver between the tab and the rear of the plug.
6. Remove the 5 mounting nuts with lock washers and the one ground wire from the display board. See Figure 5-9.
7. Separate the display board from the display panel.

D. Display Module Assembly (Figures 5-8 and 5-9)

CAUTION: Take static precautions for these procedures.

1. Place the display board on the display panel.
2. Replace the 5 mounting nuts with lock washers and the one ground wire for the display board.
3. Connect the 12 pin connector J22 from the control board to the display board.
4. Connect the ground wires to the bottom cover.
5. Slide the display board into the bottom cover.
6. Slide the bottom cover with the display board and back panel into the top cover.
7. Replace the 4 bottom cover mounting screws for the display panel.
8. Perform the Electrical Safety Procedures in Section 4 and the Checkout Procedures in Section 3.

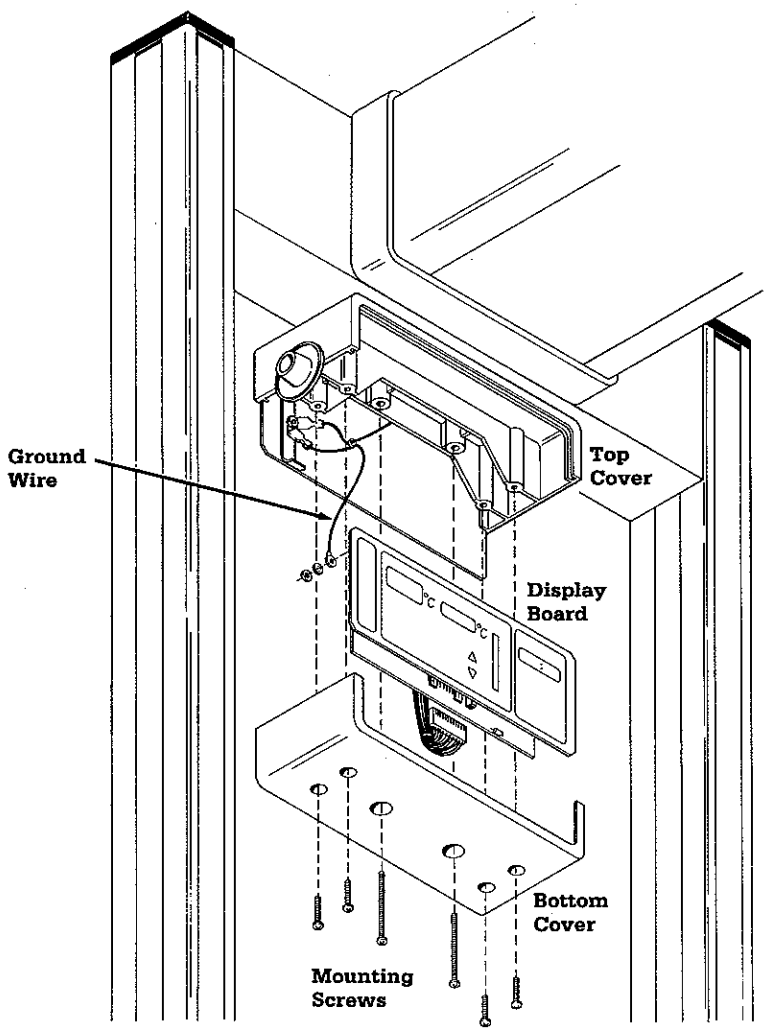

Figure 5-8
Display Module Assembly

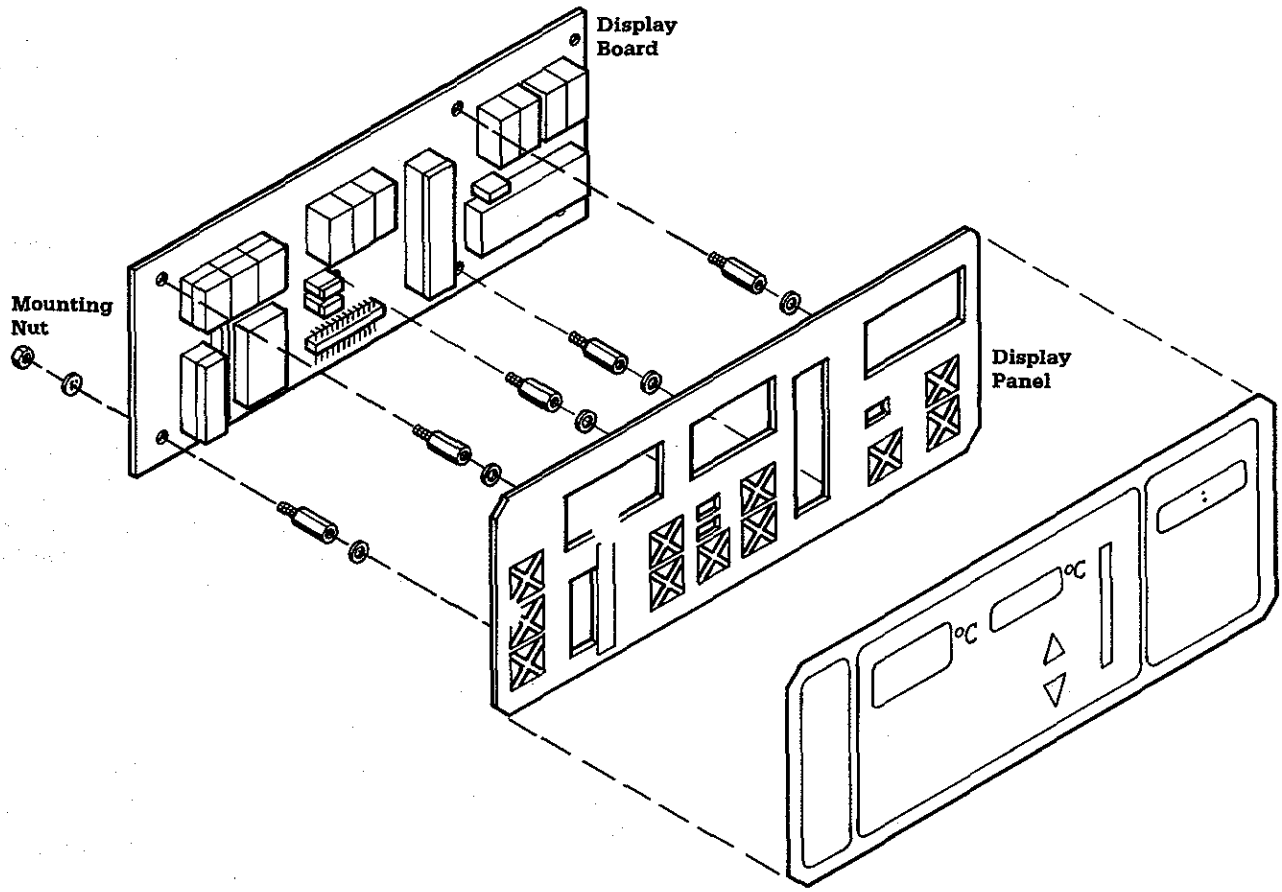

Figure 5-9
Display Board Assembly

E. Control Module Replacement (Figure 5-6)

CAUTION: Take static precautions for these procedures.

1. Carefully place the control module in position and tighten the four mounting screws for the control unit.
2. Reconnect the two connectors (J17 and J15) from the heater housing to the control board.
3. Hold the display module in position and replace the two inside mounting screws on the bottom.
4. Place the control unit cover in position and replace the two mounting screws.
5. Perform the Electrical Safety Procedures in Section 4 and the Checkout Procedures in Section 3.

F. Battery Replacement (Figures 5-6 and 5-7)

The maintenance free battery should be tested regularly and replacement is recommended every two years. Refer to Section 3.2 for testing the battery.

1. Disconnect the Infant Warmer System power cord.
2. Remove the two mounting screws for the control unit cover and remove the cover.
3. Disconnect connector J1 from the control board. Disengage the locking tab on the socket by inserting a small screwdriver between the tab and the rear of the plug.
4. Remove the 6 mounting nuts for the control board.
5. Slide the control board off the mounting posts and rotate it down. You do not have to remove any other connectors.
6. Remove the battery and install a replacement battery.
7. Place the control board in position on the mounting studs.
8. Replace the 6 mounting nuts for the control board.
9. Reconnect connector J1 to the control board.
10. Replace the two mounting screws for the control unit cover.
11. Perform the Electrical Safety Procedures in Section 4 and the Checkout Procedures in Section 3.

G. Circuit Breaker Reset

The Infant Warmer is equipped with a combination power switch and manual resetting circuit breaker. If the circuit breaker trips the power switch is deactivated. To reset the circuit breaker return the switch to the "On" position. If the circuit breaker trips again, service is required.

5.3 Bed Platform Repairs

A. Side Panel Replacement (Figure 5-10)

To remove a side panel, first lower the side panel then press the end pins in and lift the side panel out. To replace a side panel hold the end pins in, place the side panel in position and release the end pins.

To lower the side panel pull up and rotate away from the bed.

To raise the side panel rotate it to the upright position; then allow it to engage in the latched position.

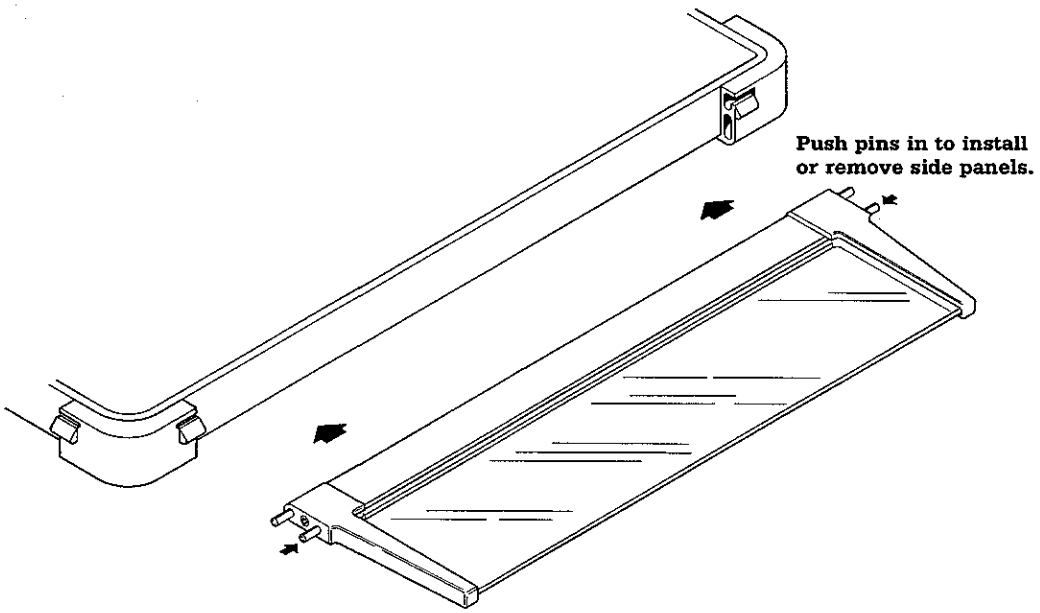

Figure 5-10
Side Panel Operation (Model 3300)

B. Side Panel Repairs (Figure 5-11)

Disassembly:

1. Remove the mounting screw from the end bracket.
2. Remove the other mounting screw and end bracket if the bed side or window need replacement.
3. Disassemble the end bracket, support button and spring from the bed side.
4. Replace damaged parts as necessary.

Assembly:

1. Mount the spring, support button, and end bracket on the bed side and window.
2. Replace the mounting screw and tighten securely.

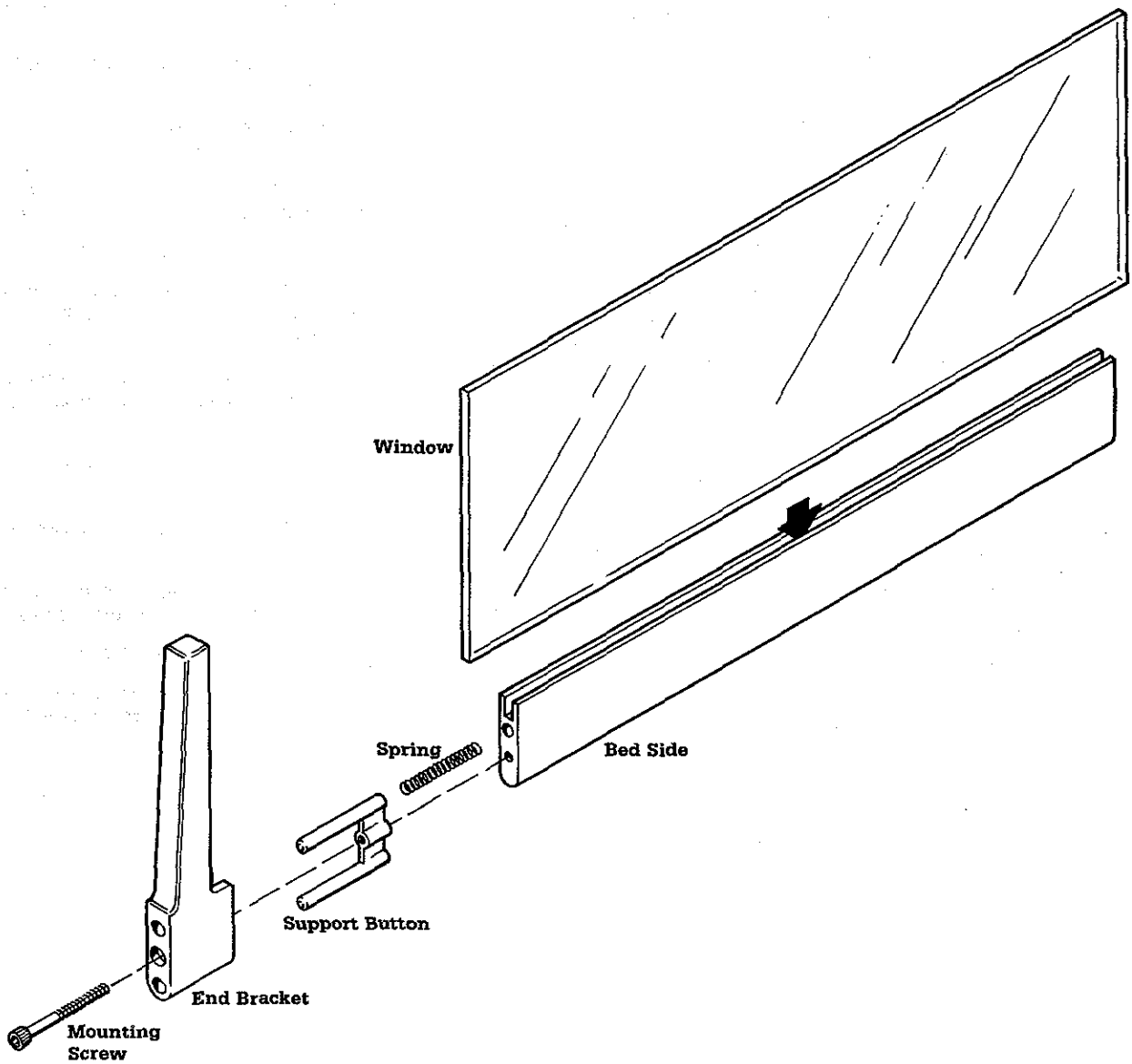

Figure 5-11
Slide Panel Assembly (0217-5367-800)

C. Bed Platform Disassembly (Figure 5-12)

1. Remove the mattress and the Plexiglas cover.
2. Remove the four side panels from the bed platform.
3. Remove the four corner blocks from the bed platform.
4. Use a 1/2 inch wrench and 7/16 inch wrench to remove the hydraulic system mounting nut and stud from the lower support.
5. Use a No. 2 Phillips screw driver and remove the four retaining rods and hooks from the bottom of the bed platform.
6. Slide the two bed pivot rods out from each side.
7. Lift the bed platform off the lower support.

D. Bed Platform Assembly (Figure 5-12)

1. Place the bed platform in position on the lower support.
2. Insert the two bed pivot rods into position on the lower support. The notch must face the bed platform (upwards) and be positioned between the notches in the bed platform.
3. Use a No. 2 Phillips screw driver and install the four retaining rods and hooks on the bottom of the bed platform. The open end of the hooks should face away from the bed platform.
4. Use a 1/2 inch wrench and 7/16 inch wrench to install the hydraulic system mounting nut and stud on the lower support.
5. Replace the four corner blocks on the bed platform.
6. Replace the four side panels on the bed platform.
7. Replace the Plexiglas cover.
8. Replace the mattress.

E. Hydraulic System Removal (Figures 5-13 and 5-14)

Note: Ohmeda recommends replacing the hydraulic system as an assembly. The system uses a standard synthetic hydraulic oil.

Note: The unit may be carefully placed on it's right side (looking from the front) or the bed may be removed for replacement of the hydraulic system.

1. Use a 1/2 inch wrench and 7/16 inch wrench to remove the hydraulic system mounting nut and stud from the lower support.
2. Remove the two Phillips head mounting screws which hold the outer (triangular shaped) cover plate in position.
3. Remove the four Phillips head mounting screws which hold the inner (square shaped) cover plate in position. Take care to ensure that the tension on the spring is released carefully.

Note: The tilt lever, rod, spring, and mounting pin can be removed for replacement if necessary. Remove the pin from the top of the bed to remove the spring and rod.

4. Note how the tubing is installed in parallel and does not overlap until it reaches the storage area.
5. Remove the hydraulic system assembly for replacement.

F. Hydrualic System Installation (Figures 5-13 and 5-14)

1. Transfer the mounting pin from the old hydraulic cylinder to the new hydraulic cylinder.
2. Place the hydraulic cylinder with pin in position.
3. Install the tubing for the hydraulic system in parallel and make sure it does not overlap until it reaches the storage area.

Note: The tubing must not be stretched, pinched or kinked during reassembly. If the tubing is pinched the bed will not tilt.

4. Place the inner (square shaped) cover plate in position.
5. Install the two mounting screws closest to the tilt lever.
6. Install the two mounting screws closest to the cylinder at the edge of the cover plate.
7. Coil the tubing so it fits in the triangle area.
8. Place the outer (triangular shaped) cover plate in position and replace the two Phillips head mounting screws.

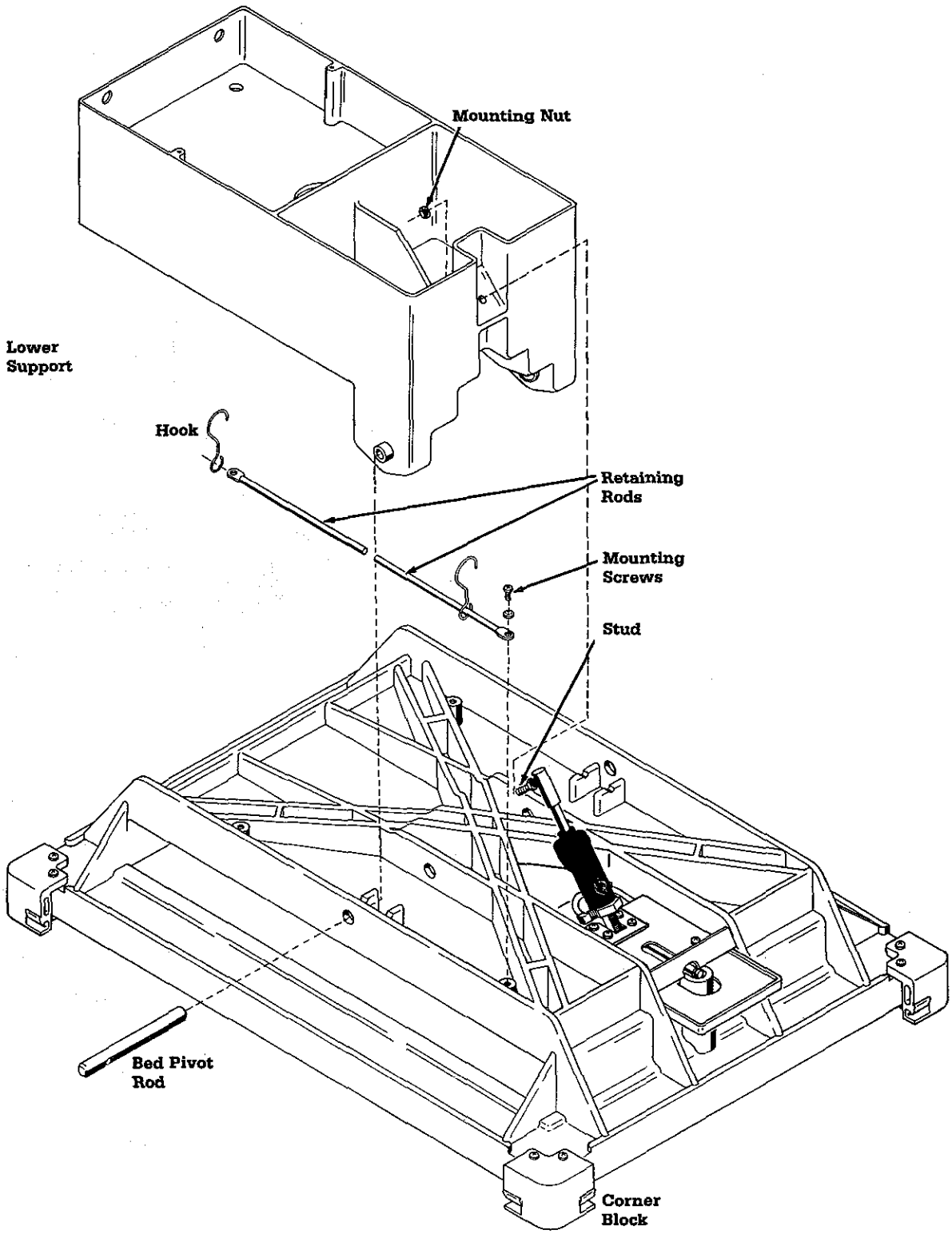

Figure 5-12
Bed Platform Assembly

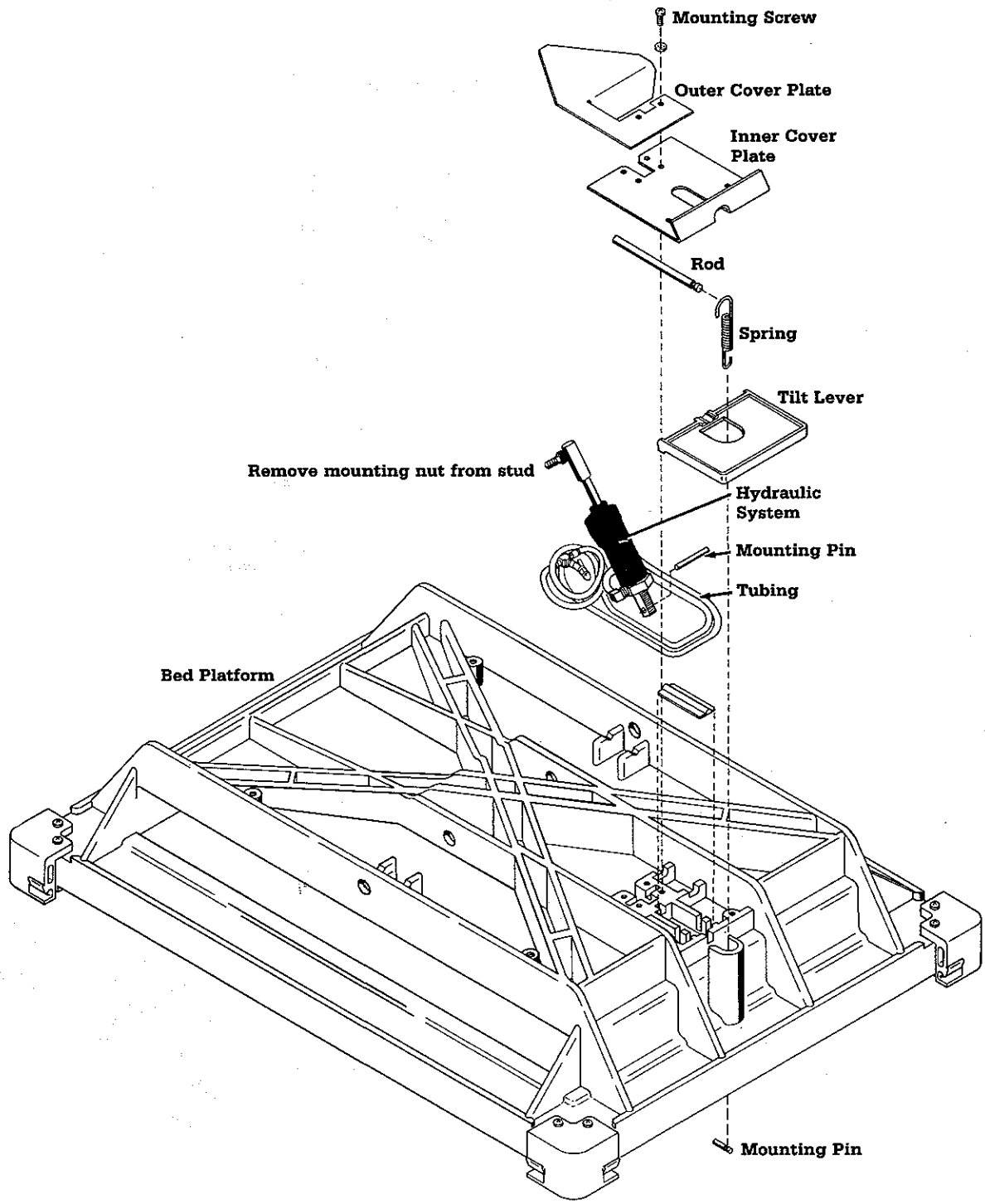

Figure 5-13
Hydraulic System Assembly

Install the tubing for the hydraulic system in parallel and make sure it does not overlap until it reaches the storage area. The tubing must not be stretched, pinched or kinked during reassembly.

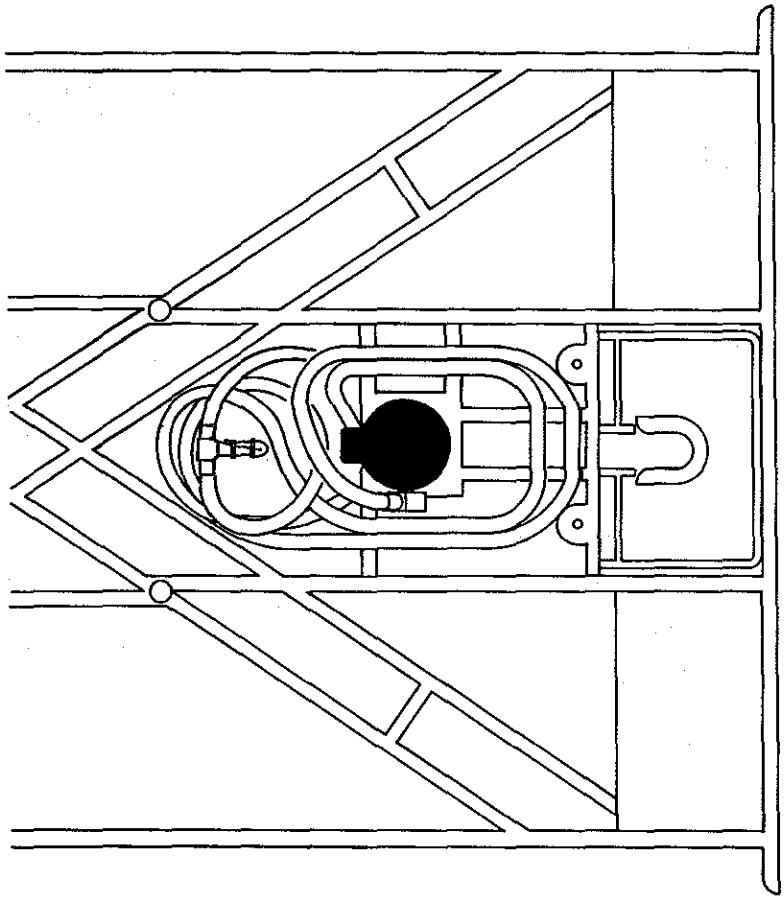

Figure 5-14
Hydraulic Tubing Installation

5.4 Caster Replacement

Casters can be replaced with the unit upright or the unit may be carefully placed on it's right side (looking from the front).

CAUTION: For safety have at least 2 people available to replace a caster. Remove all accessory equipment.

1. Lock or block all remaining casters to keep the unit from rolling around (unless the unit has been laid on it's side).
2. Use blocks to support the frame near the caster you are replacing.
3. Remove the plastic end plate from the stand assembly.
4. Use a 7/8" socket and ratchet to remove the caster mounting nut.

   Note: There is another nut underneath the caster. You may have to hold this nut while removing or tightening the caster mounting nut.
5. Tilt the unit; remove the old caster and install the new caster (unless the unit has been laid on it's side).
6. Replace the mounting nut and tighten securely.

   Note: There is another nut underneath the caster. You may have to hold this nut while removing or tightening the caster mounting nut.
7. Replace the plastic end cap.

5.5 Yoke Manifold Repairs

WARNING: Never oil or grease oxygen equipment unless a lubricant that is made and approved for this type of service is used. Oils and grease oxidize readily, and in the presence of oxygen, will burn violently. Vac Kote* is the oxygen service lubricant recommended (Order No. 0220-0091-300).

*Vac Kote is a trademark of Ball Brothers Research Corporation.

A. General
(Figures 5-15 and 5-16)

Periodically lubricate the Tee handle screws with a small amount of oxygen service lubricant. This will prolong their life and make sealing of the yoke gaskets easier.

Periodically replace the yoke check valve strainer nipples before they become clogged with lint or dust. Momentarily open and then close the cylinder valve before installing cylinders to blow any foreign material from the valve.

When installing fresh cylinders, remove the old gasket and use a clean new gasket (gasket seal, stock no. 0210-5040-100) in its place. Open cylinder valves S-L-O-W-L-Y to avoid straining high pressure gauges and developing excessive heat of recompression.

B. Gauge Replacement
(0205-8350-300)

WARNING: When replacing gauges, be sure to use identical pressure ranges.

1. Turn off oxygen supply.
2. Use a 7/16 inch open end wrench and turn the gauge counterclockwise to remove it.
3. Apply Teflon tape around the threads of the new gauge.
4. Install the new gauge by turning it in clockwise. Do not over-tighten.

C. Gauge Lens Replacement
(0212-0900-300)

1. Turn the lens cover counterclockwise to remove it.
2. Clean both sides of the replacement lens.
3. Place the lens cover in position over the gauge face and turn the lens clockwise. Do not over-tighten.

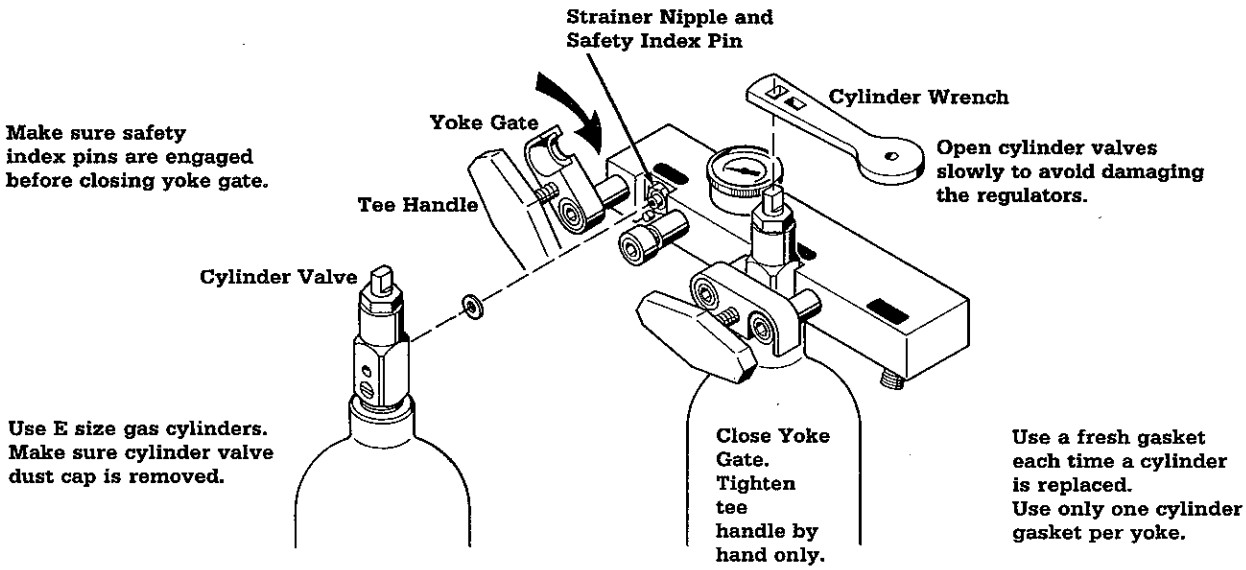

Figure 5-15
Oxygen Manifold Maintenance

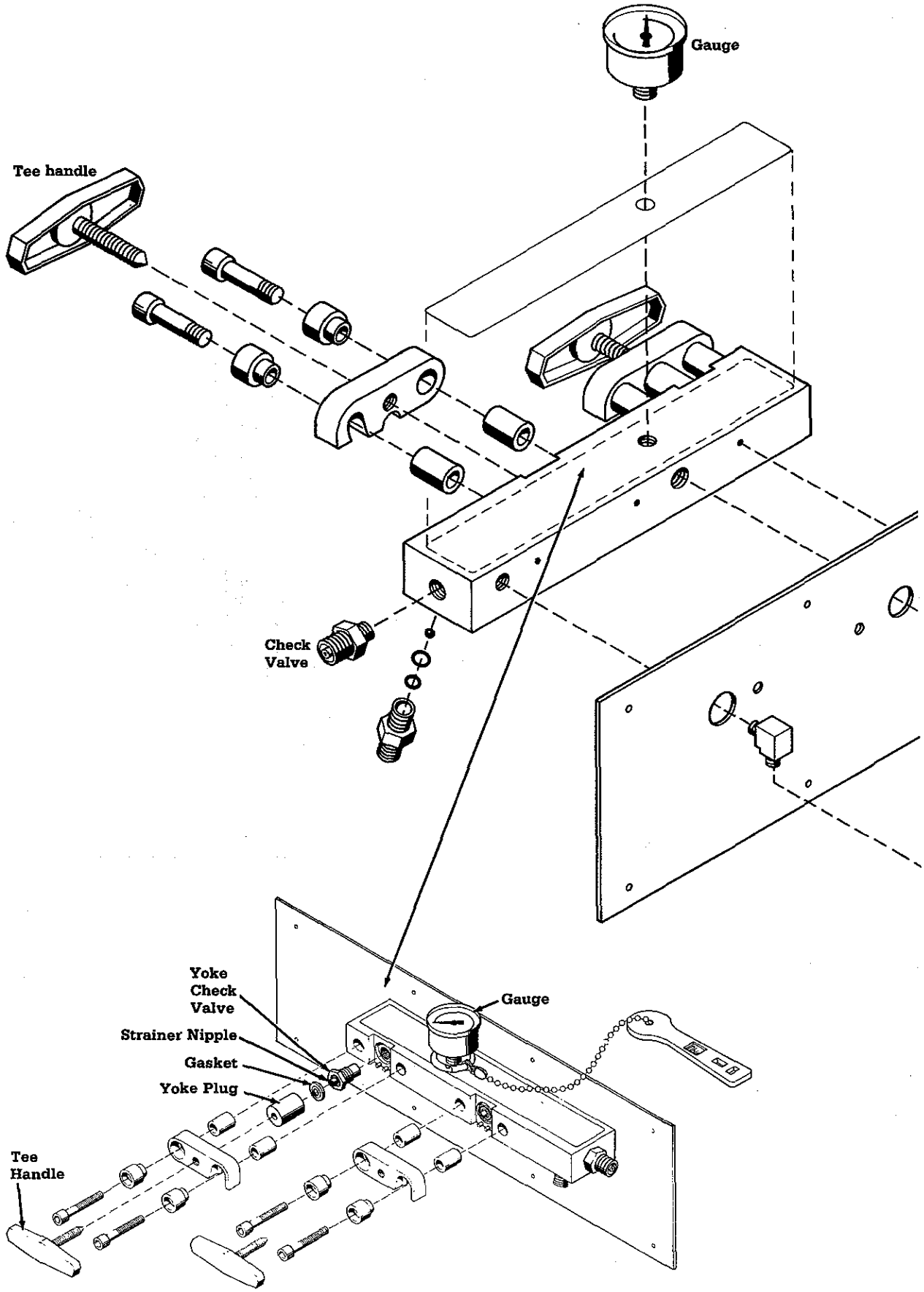

Figure 5-16
Manifold Assembly

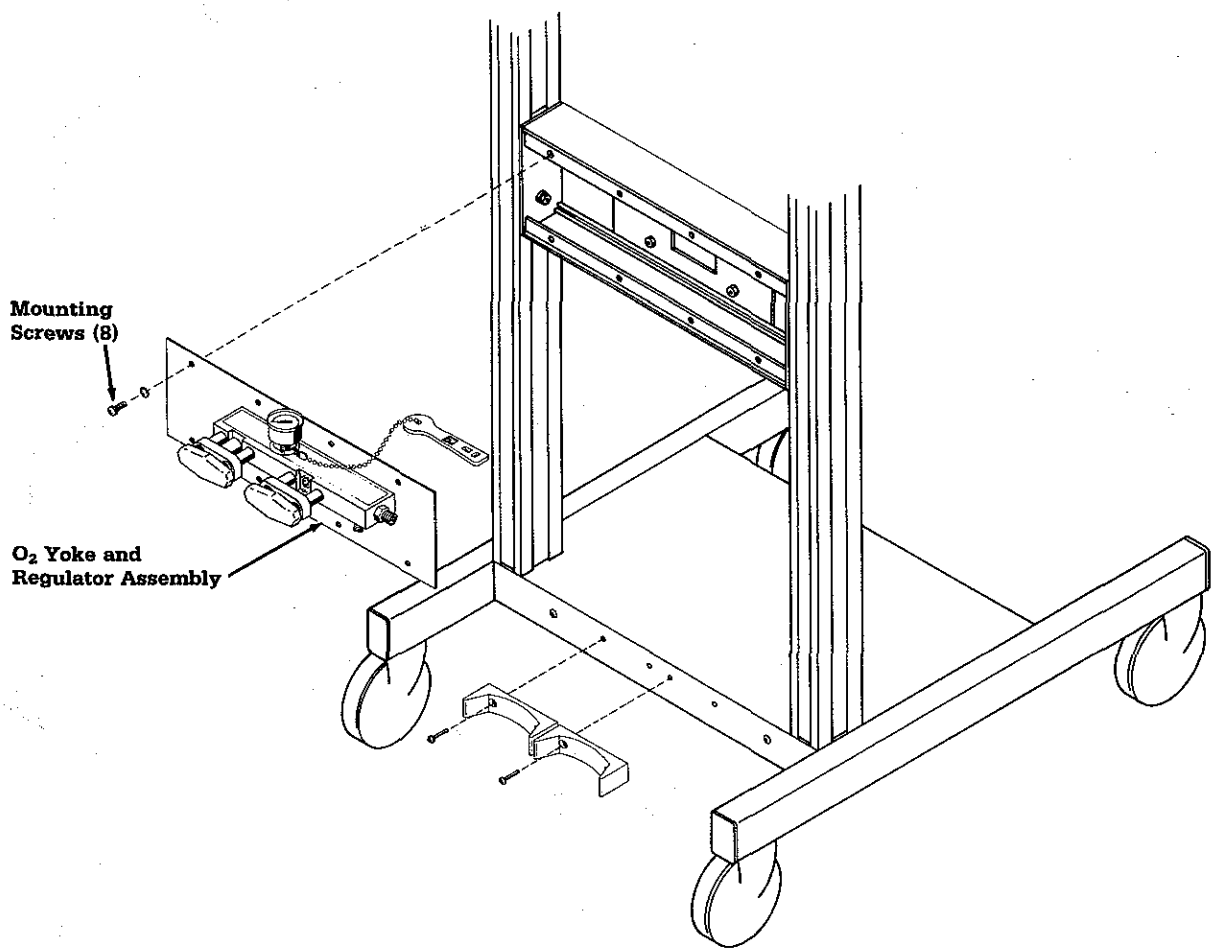

Figure 5-17
Manifold Assembly Removal

D. Strainer Replacement

Periodically (at least once a year) replace the strainer nipples before they become clogged with lint or dust.

The strainers are located in the cylinder yokes of the gas supply modules. Remove the gas cylinder, if present. With the yoke gate swung out of the way, use a flat-tip screwdriver to unscrew the strainer. Screw the replacement strainer (Stock No. 0206-2806-725) snugly into place.

Install yoke plugs (Stock No. 0206-7129-525) and gaskets (Stock No. 0210-6460-300) on unused yokes to prevent dust and lint from accumulating in the strainers or leakage occurring between the check valves.

The tee handle screw can be unscrewed from the yoke gate and replaced if necessary. Order Stock No. 0219-3372-600.

E. Check Valve Replacement

Replace the check valves in the gas manifold when required. The check valves are located in the cylinder yokes of the gas supply modules.

1. Remove the gas cylinder, if present. With the yoke gate swung out of the way, use the special tool (part number 0175-0420-000) to remove the check valve from the manifold block. Replace parts as necessary.

a. Check valve complete 0207-8081-800
b. Strainer 0206-2805-725
c. Plug 0206-7125-325
d. Cap 0206-2314-525
e. Seat 0206-2317-540

Screw the replacement strainer (Stock No. 0206-2805-725) snugly into place.

F. High Pressure Regulator Repair (Figure 5-17 and 5-18)

Part No. 0805-9226-600

WARNING: Do not use oil or oil bearing materials on or near the regulator. Oils and greases oxidize readily and, in the presence of oxygen, they will burn violently. All metallic parts of the regulator must be discarded if contaminated with oil or grease.

1. Disconnect the oxygen pipeline connection and remove the oxygen cylinders.

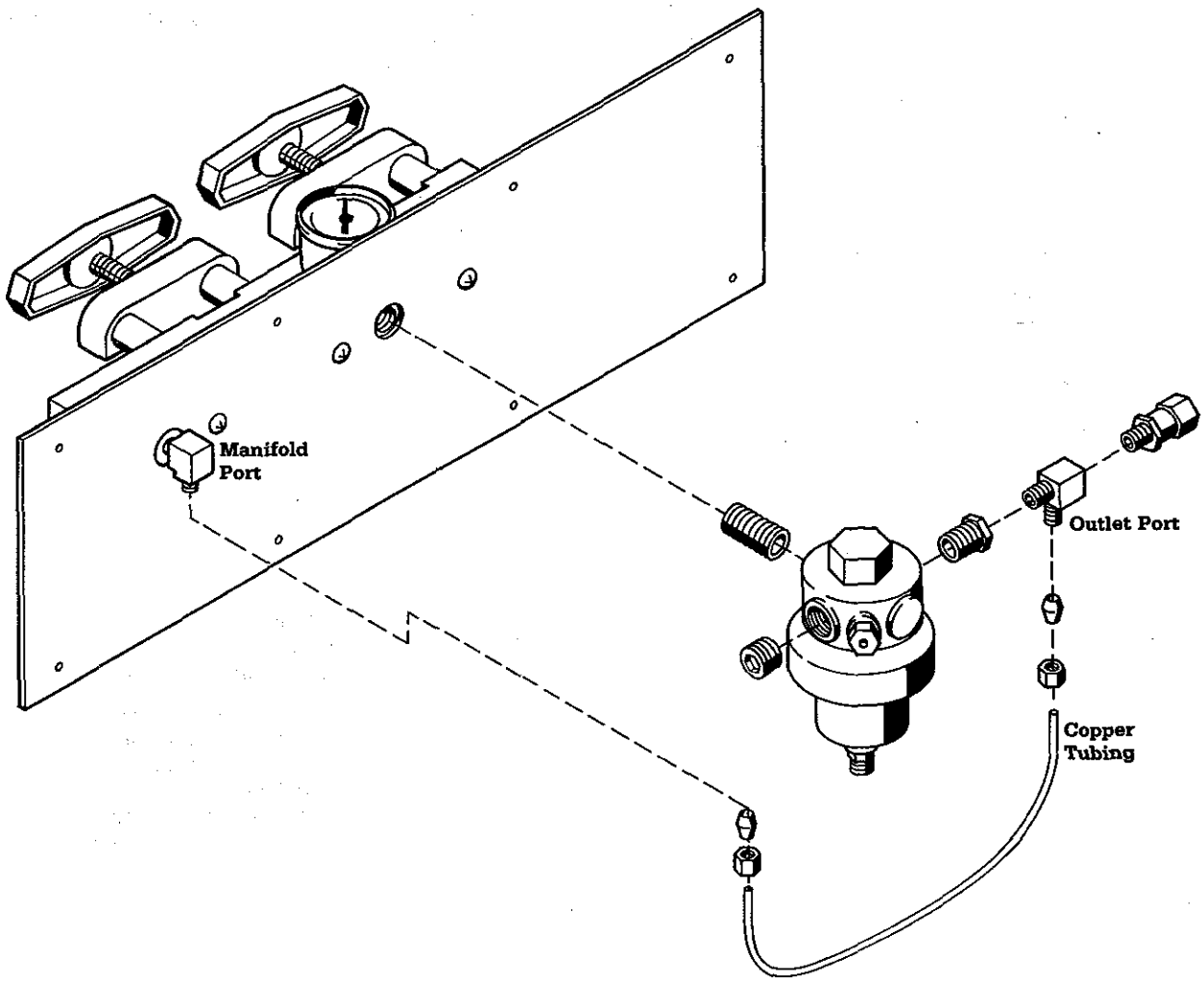

Figure 5-18
High Pressure Regulator

2. Remove the eight mounting screws for the Oxygen Yoke and Regulator Assembly and then remove the assembly.
3. Disconnect the copper tubing from the outlet port of the regulator and the elbow of the manifold port.
4. Remove the regulator from the manifold block by turning it counterclockwise.
5. Place the regulator in a vise with the spring case up.
6. Turn the adjustment screw counterclockwise until the screw no longer exerts pressure on the internal parts of the regulator.
7. Use a 1 1/2 inch wrench on the hexagon of the spring case, and unscrew it by turning it counterclockwise.
8. Remove the spring case, spring button, spring, diaphragm plate, diaphragm and thrust plate.
9. Using a wrench, remove the seat retainer, o-ring, pin, seat, valve assembly, and marginal spring.
10. Replace new pin, o-ring, seat and marginal spring with parts from repair kit No. 0306-9951-870.
11. Use a wrench to tighten the seat retainer into the regulator body to a torque of approximately 119 inch pounds.
12. Replace thrust plate diaphragm, diaphragm plate, spring, spring button and spring case.
13. Use a wrench across the hexagon on the spring case, turn the case clockwise to replace it. Do not over-tighten.
14. Reattach the regulator to the manifold block. Use Teflon tape to seal the thread connection.

    Note: The regulator must be reset to 52 ± 2 psig with a 500 cc flow passing through it.
15. Attach the special fitting and gauge assembly (Tool Number 0175-0543-000) to the regulator outlet. This special tool has a (0.025 in.) orifice to maintain a 500 cc flow for proper regulator adjustment.
16. Adjust the regulator adjustment screw until the pressure gauge reads 52 ± 2 psig.
17. Tighten the adjustment screw lock nut.
18. Remove the special fitting and gauge assembly.
19. Reconnect the copper tubing to the regulator outlet.
20. Place the assembly in position and replace the eight mounting screws.

G. Pneumatic Troubleshooting

This troubleshooting information provides a list of some problem conditions, possible causes, and solutions. If any of the below symptoms occur, shut off the oxygen cylinder valve.

Condition	Possible Cause	Solution
Gas leakage at the regulator outlet when the adjustment screw is completely released.	Leak across the regulator seat.	Replace seat and corresponding parts.
Outlet pressure increases steadily above set pressure (no flow through system).	Leak across the regulator seat.	Replace seat and corresponding parts.
Gas leakage from the spring case.	Loose spring case or damaged diaphragm.	Check seating of spring case. Replace diaphragm if damaged.
Excessive drop in working pressure.	Worn or sticking internal parts. Internal flow obstructed. Dirty filter. Cylinder valve not fully open. Dirty yoke check valve strainer nipple.	Replace worn or sticking parts. Check for flow obstructions. Replace filter. Open cylinder valve. Clean yoke check valve and strainer nipple.
Gas leakage from relief valve.	Dirty valve seat. Leak across the regulator seat.	Replace seat and corresponding parts.

6/Control Unit Troubleshooting Guide

The error code is displayed in the Elapsed Time display.

Error	Description	Possible Cause
#01	Instruction test fails	Microprocessor 8031 defective
#02	Calibrate high fails	ADC calibration Cal high resistor defective
#03	Calibrate low fails	ADC calibration Cal low resistor defective
#04	Checksum fails	Eprom defective Microprocessor 8031 defective
#05	Ram test fails	Microprocessor 8031 defective
#06	Port 1 lines	I/O expander 8243 defective Microprocessor 8031 defective
#07	ADC not converting	A/D Converter ADC3711 defective Voltage Reference LM10 defective I/O expander 8243 #2 defective
#08	Hardware triac timer	Logic gate 4020B defective IC in triac test area defective
#09	Heat not controlled	Heater triac defective Microprocessor 8031 defective Heater opto-isolator or driver defective
#10	Line voltage out of range.	Line voltage compensation pot. on power supply board not calibrated.

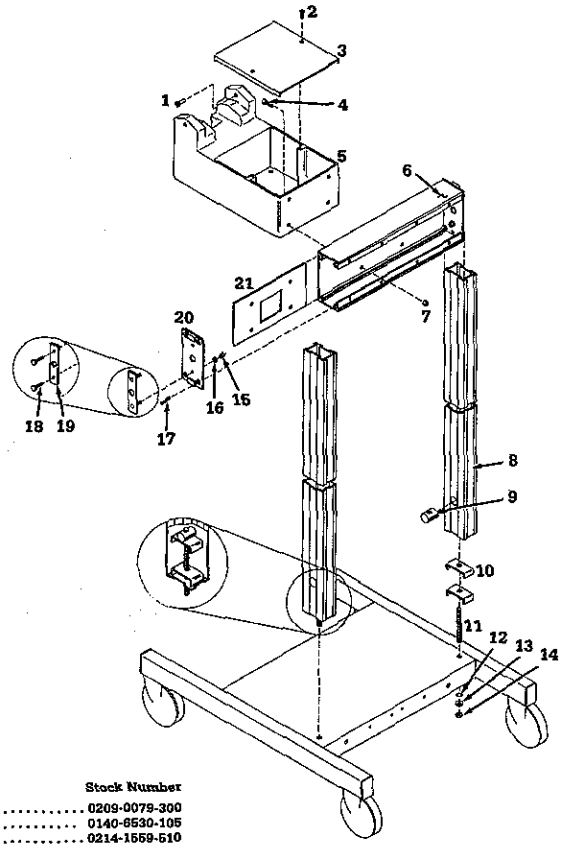

Description	Stock Number
1. Bearing	0209-0079-300
2. Screw 10-24 × 5/16	0140-6530-105
3. Bed support cover	0214-1559-510
4. Screw, 3/8-16 × 1 inch	0144-2245-416
5. Bed support	0217-5310-210
6. Lower cross support	0217-5269-300
7. Nut, elastic 3/8-16	0202-1022-300
8. Upright w/dovetails	0217-5266-300
9. Upright mounting bar	0217-5296-542
10. Tierod centering bracket	0214-1564-500
11. Upright tierod 1/2-13x5.75 inches	0217-5284-300
12. Lockwasher 1/2 int.	0202-3425-300
13. Washer .562ID 1.250OD	0202-4548-300
14. Locking nut 1/2-13	0202-1021-300
15. Hex nut 5/16-18	0144-3140-113
16. Lockwasher 5/16 int.	0202-3418-300
17. Screw, 1/4x1	0142-4247-116
18. Stud 5/16-18	0400-5531-300
19. Double locking lug	0217-5271-542
20. Upright casting	0217-5285-100
21. Support plate	0214-1558-511

Figure 7-1
Infant Warmer Frame Assembly (Model 3300)

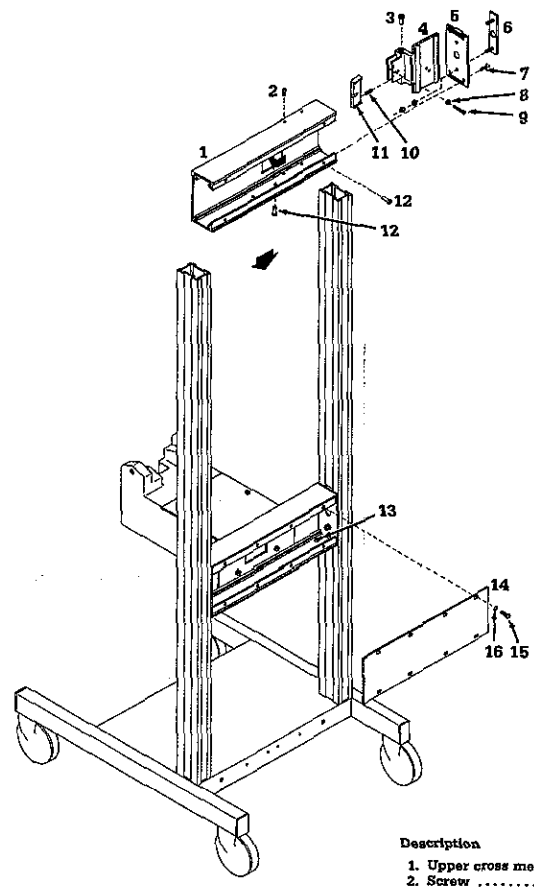

Description	Stock Number
1. Upper cross member 17.50"	0217-5268-300
2. Screw	0140-6136-110
3. Bearing	0209-0080-300
4. Hinge	0217-5264-510
5. Upright-cross mounting casting	0217-5285-100
6. Double locking lug	0217-5271-542
Stud 5/16-18	0400-5531-300
7. Screw, 1/4 × 1	0142-4247-116
8. Nut, hex 6-32	0144-3324-113
9. Screw, 6-32 × 1/2	0140-6124-108
10. Spring	0203-3317-300
11. Compression bar	0217-5286-100
12. Rivnut, 8-32 × 1/2 inch	0145-1327-310
13. Screw	0142-1874-610
14. Cover	0214-1550-549
15. Screw, 8-32 × 3/8	0140-6627-106
16. Lock washer, #8	0144-1108-131

Figure 7-2
Infant Warmer Frame Assembly (Model 3300)

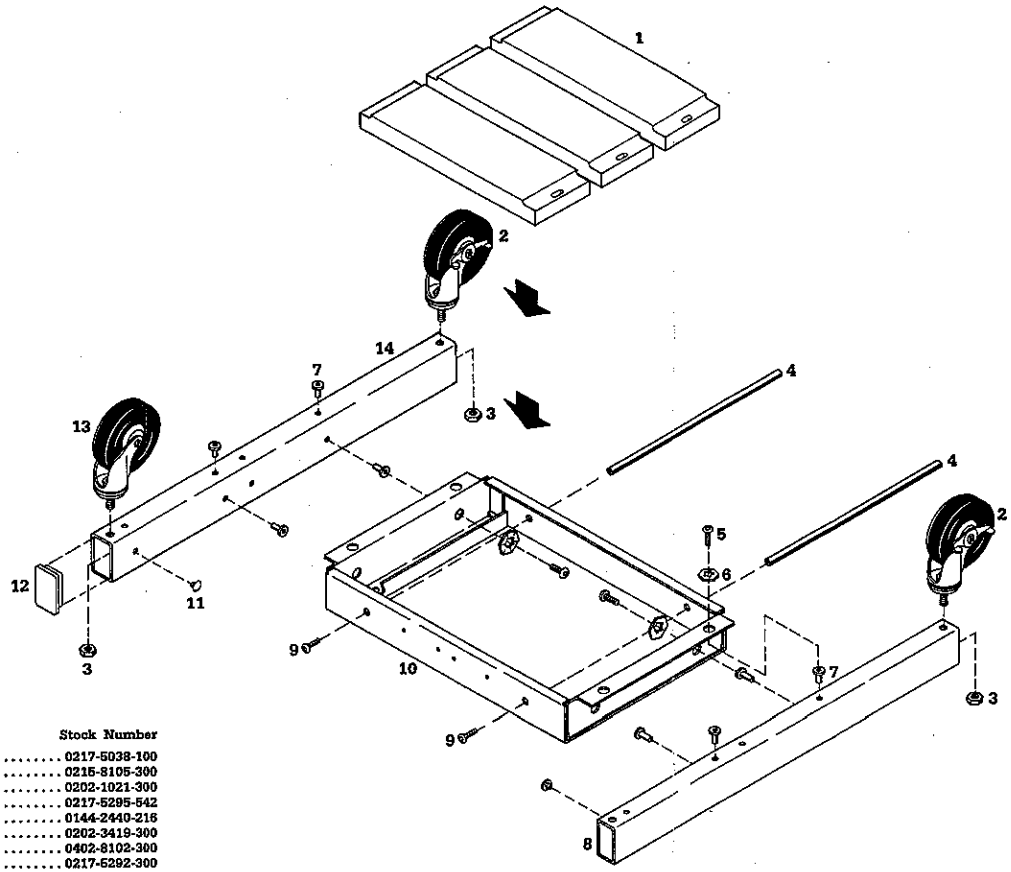

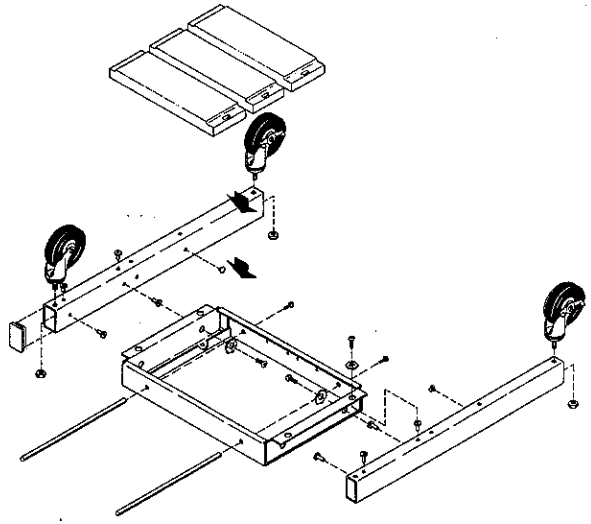

Base Assembly (Model 3000)

Note: Rivnuts are placed in different locations for 3000 and 3300 applications.

Description	Stock Number
1. Cast iron base weight	0217-5038-100
2. *Locking 5" caster	0216-8105-300
3. Locking nut	0202-1021-300
4. Weight support rod	0217-5295-542
5. Screw 5/16-18 x 1	0144-2440-216
6. Pyramidal lockwasher	0202-3419-300
7. Rivnut 5/16-18	0402-8102-300
8. Right leg	0217-5292-300
9. Screw 5/16-18 x 1	0144-2440-216
10. Base subassembly	0214-1553-710
11. Hole plug	0203-0232-300
12. End cap	0211-1546-300
13. *Non-locking 5" caster	0216-8104-300
14. Left leg	0217-5293-300

Note: Earlier units used a different style caster. If replacement is required, replace casters in pairs or replace all 4 as required.

Figure 7-3
Base Assembly (Model 3300)

38

7/Illustrated Parts and Parts List

Description	Stock Number
1. Controller Assembly	0217-5362-800
2. Power cord	0208-0950-300
3. Plug guard	0214-1562-510
4. Screw	0140-6627-108
5. Internal lock washer #8	0144-1108-131
6. Rechargeable 7.5v battery	0690-1000-310

8040249 690-2500-365 $81.00 Toggle Switch

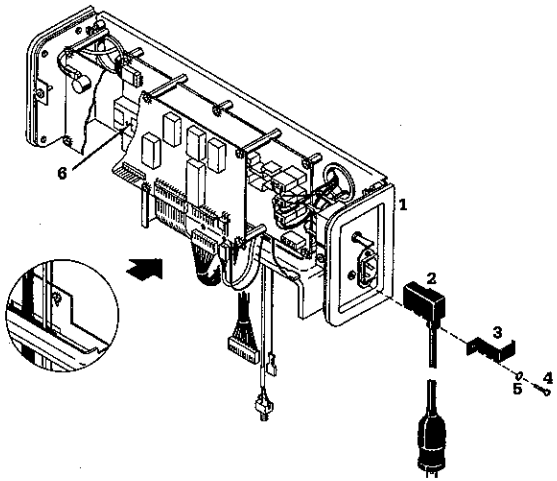

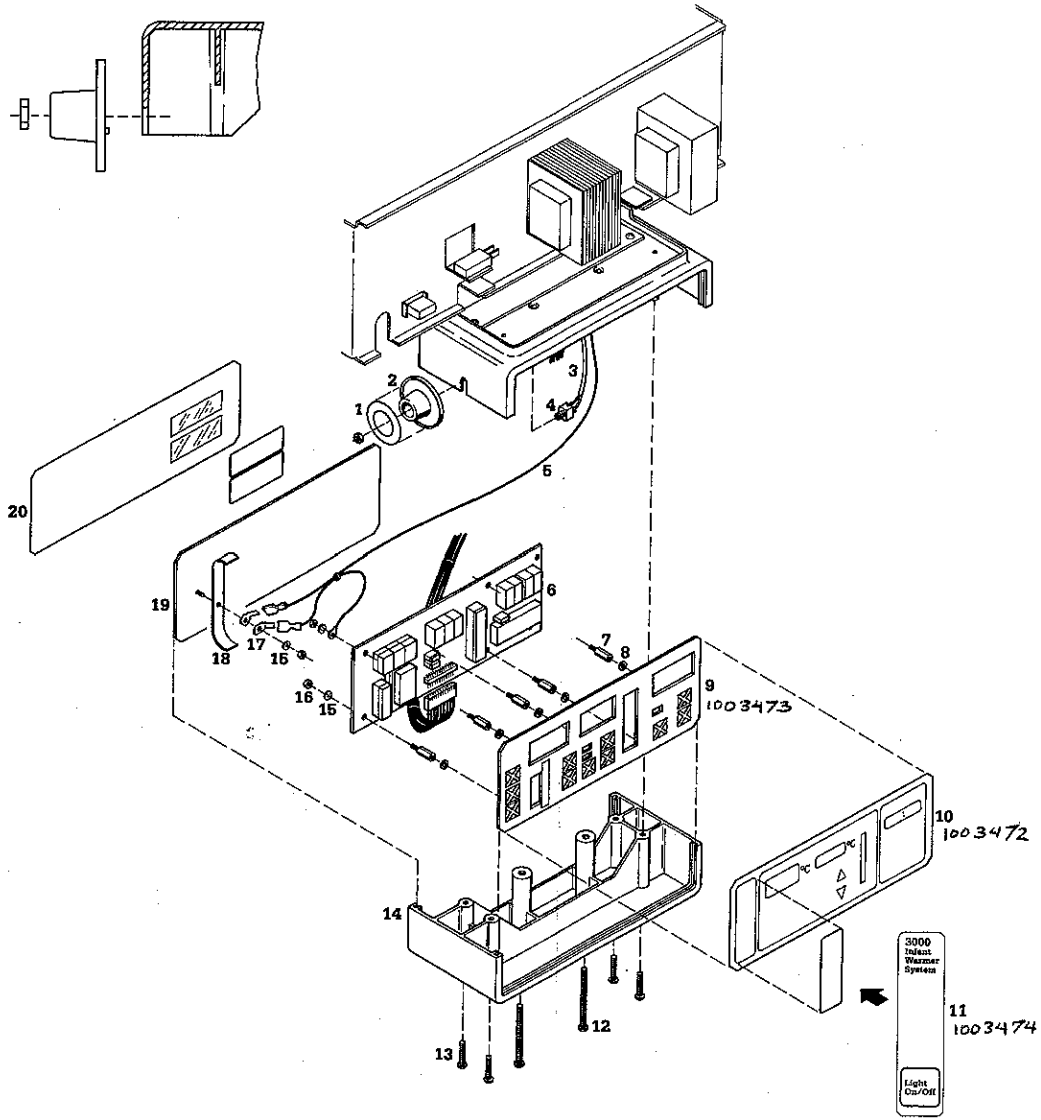

Description	Stock Number
1. Probe nameplate	0205-4711-304
2. Phone jack bezel	0217-5219-100
3. Patient cable harness assembly	0690-1230-322
4. Miniature phone jack Switchcraft 142a	0690-1950-330
5. Grounding harness assembly	0208-6182-700
6. Display board	0631-5031-700
7. Standoff	0402-0233-300
8. Brass washer	0202-4510-300
9. Switch panel	0208-5129-300
10. Front label	0205-4945-300
11. Label insert set	0205-4946-300
12. Screw, 8-32 x 2 1/4	0140-4127-236
13. Screw #6 x 5/8	0142-2833-210
14. Display panel bottom cover	0217-5254-100
15. Lock washer, #6 internal	0144-1106-131
16. Nut, 6-32 Hex	0144-3324-113
17. Faston tab, 250 series Amp #60465-2	0208-0439-300
18. Display panel grounding spring	0214-1569-500
19. *Rear panel assembly	0217-5361-700
20. Serial number label set	0205-4958-300

* Serial and part number labels must be transfered to the new panel.

Figure 7-4
Infant Warmer Controller Assembly

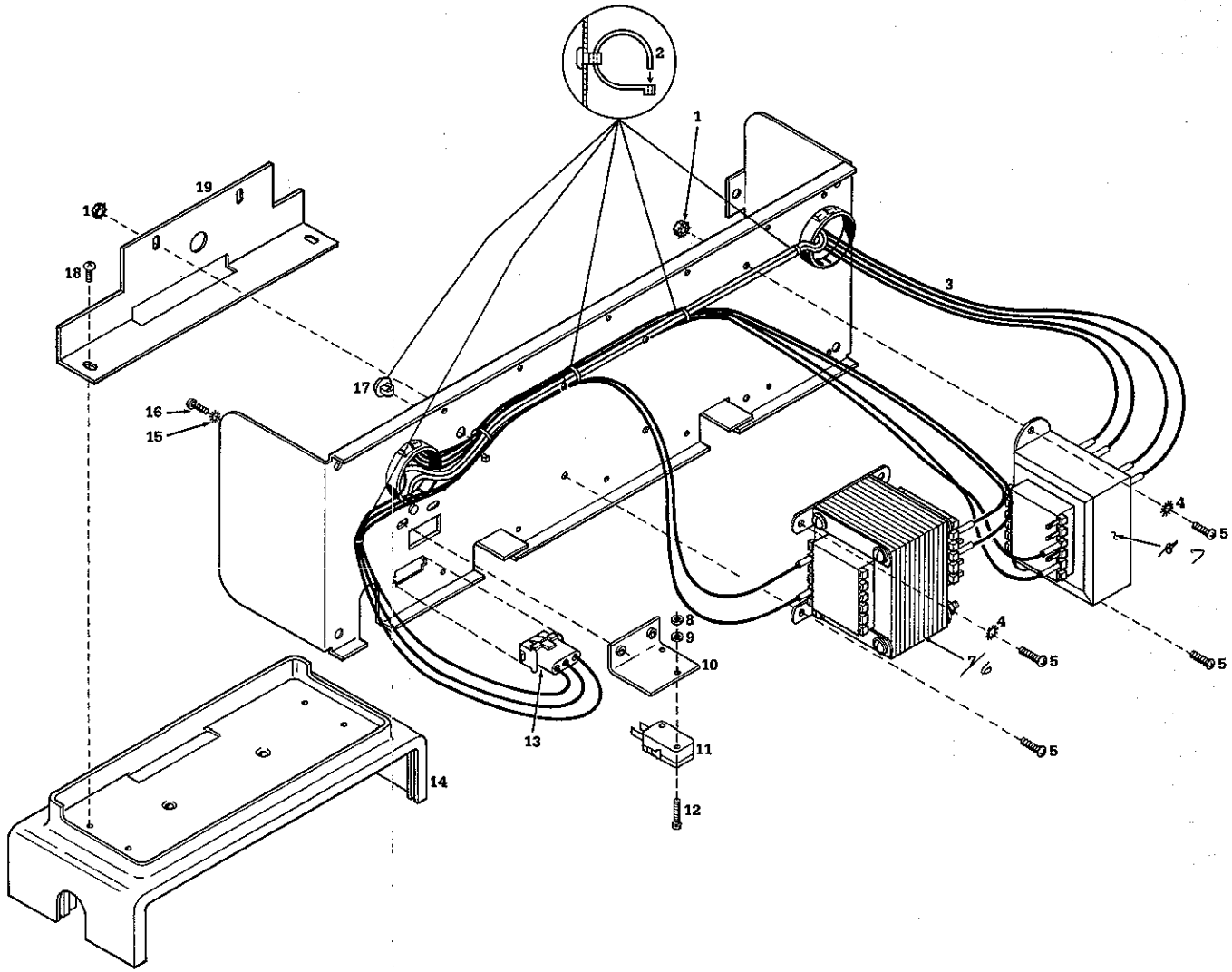

Description	Stock Number
1. Lock nut 8-32 w/ext lock washer	0202-1131-300
2. Cable tie 4"	0203-5915-300
3. Controller harness	0208-6181-700
4. External lock washer	0202-3205-300
5. Screw, 8-32 x 3/8	0140-6627-106
6. Transformer 95, 115, 220, 240vac input 12vdc output	0208-7581-300
7. Transformer 95, 115, 220, 240vac input 8 to 13vdc output	0208-7580-300
8. Hex nut 4-40	0144-3217-113
9. Internal #4 lock washer	0144-1104-131
10. Mounting plate	0214-2275-711
11. Micro switch (1 amp)	0208-5163-300
12. Screw, 4-40 x 5/8	0140-6517-110
13. Connector, 3 conductor Amp #350767-1	0690-1561-425
14. Display box top cover	0217-5263-100
15. External #6 lock washer	0202-3200-300
16. Screw, 6-32 x 1/4	0140-6124-104
17. Cable tie mount	0203-5922-300
18. Screw #6 x 5/8	0142-2833-210
19. Display box mounting bracket	0214-1571-500

Figure 7-5
Infant Warmer Controller Assembly 2

Description	Stock Number
1. Lock nut 8-32 w/ext lock washer	0202-1131-300
2. Tab faston 250 series Amp #60465-2	0208-0439-300
3. External lock washer	0202-3205-300

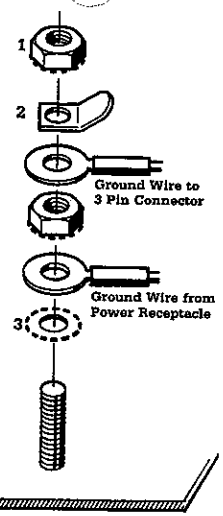

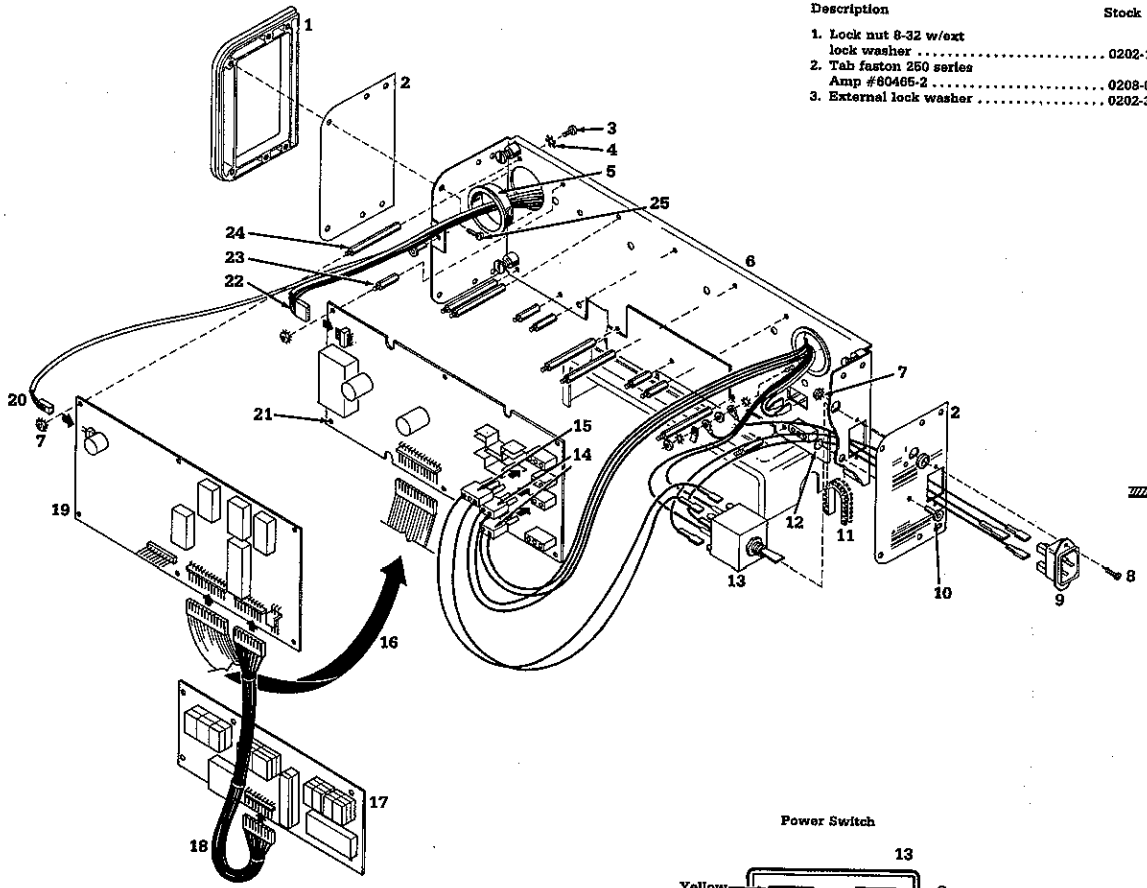

Description	Stock Number
0305-0403-910 Infant Warmer Controller Housing	
1. Controller end cap	0217-5320-100
2. Controller label set	0205-4959-300
3. Screw, 6-32 x 1/4	0140-6124-104
4. External #6 lock washer	0202-3200-300
5. Snap split bushing	0208-0607-300
6. Controller chassis	0214-2270-511
*Captive pem fastenner, 8-32	0402-2024-300
Stud, 6-32 x 1/2	0143-1501-208
7. Lock nut #6-32	0202-1130-300
8. Screw 6-32 x 3/8	0400-3135-300
9. Power cord receptacle	0208-0521-300
10. Rivnut 8-32 x 1/2	0145-1327-310
11. Nylon grommet	0211-1472-300
12. Lock washer 1/4" int.	0202-3415-300
13. Toggle switch dpst	0690-2500-365
14. 2 Conductor connector, Amp #350777-1	0690-1561-401
15. 3 Conductor connector, Amp #350766-1	0690-1561-402
16. Cable assembly, 16 conductor	0690-1230-321
17. Display board	0631-5031-700
18. Cable assembly, 12 conductor	0690-1230-320
19. Control board	0631-5033-700
20. Connector, 2 conductor, Methode 1300-102-422	0690-1560-456
21. Power supply board	0631-5032-700
22. Connector, 5 conductor, Methode 1300-106-422	0690-1560-457
23. Spacer 1/4"hex 6-32	0402-0234-300
24. Spacer 1/4"hex 6-32	0402-0236-300
25. Screw #4 x 1/4	0142-4862-104

* If necessary replace with a 1 inch 8/32 flat head screw.

Power Switch

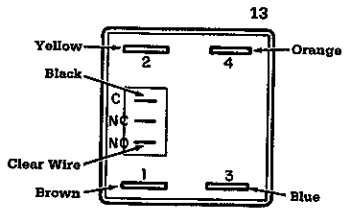

Rear View

Receptacle

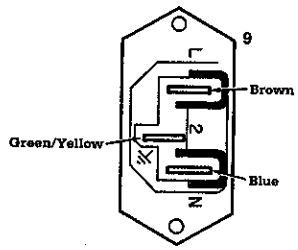

Rear View

Figure 7-6
Infant Warmer Controller Assembly

Parts Legend ... ower Supply Board 0631-5032-700

Symbol	Description	Part Number
B1	Battery, 9 volt rechargeable	0690-1000-310
C3 7 9	Capacitor .33 mfd 50v 20% ceramic	0682-1196-300
C4 6 8	Capacitor .1 mfd 50v 20% ceramic	0682-1189-313
C5	Capacitor 15 mfd 16v 20% tantalum	0682-2600-300
C10	Capacitor .47 mfd 50v 20% ceramic	0682-1181-302
C11 12	Capacitor 4700 mfd 16v 20% electrolytic	0682-7171-300
C15	Capacitor .01 mfd 1000v 20% ceramic	0682-1170-311
CR1 2 6	Diode bridge VM08	0683-0500-000
CR3 5 8	Diode IN4001	0683-0035-300
CR4	Diode Shottky VSK120	0683-0100-302
H1	Screw, 4-40 x 1/4	0140-6217-104
H2	Lock-washer int. #4	0202-3407-340
H3	Hex nut 4-40	0144-3217-113
H4	Nut elast 4-40	0202-1013-300
H5	Heat sink	0608-3023-300
H6	Heat sink	0608-3018-300
For BT1	Battery holder, 9 volt	0208-1570-300
J11	Header 6 pin	0690-1560-455
J12	Header 16 pin	0690-1560-452
J13	Header 3 pin	0690-1561-406
J14	Header 2 pin	0690-1561-404
J16	Header 2 socket	0690-1561-403
J17	Header 3 socket	0690-1561-405
K1	Relay 9vdc dpst	0690-2350-335
Q1 2	Triac MAC15A-8	0685-2000-303
Q5	IC T2300 zero crossing triac	0685-2000-301
For Q5	Transistor pad T0 5 case	0686-9020-301
R1	Resistor 100 ohm 1/4w 5% carbon film	0680-0449-300
R2	Resistor 100k 1/4w 1% metal film	0680-0250-321
R3	Resistor var 10k 3006p-1-103	0681-0004-300
R4	Resistor var 1k 3006-p-103	0681-0030-300
R5	Resistor 100k 1/4w 5% carbon film	0680-0521-300
R6 10	Resistor 510 ohm 1/4w 5% carbon film	0680-0466-300
R9	Resistor 180 ohm 1/4w 5% carbon composition	0680-0380-303
R11	Resistor 470 ohm 1/4w 5% carbon film	0680-0465-300
R12 16 24	Resistor 150 ohm 1/4w 5% carbon film	0680-0453-300
R13	Resistor 47K 2w 5% carbon composition	0680-1101-300
R15	Resistor 22 ohm 1/4w 5% carbon composition	0680-0380-301
TP	Header 12 pin	0690-1560-451
U1	IC VQ1000 CJ vmos power FET	0684-0400-023
U3	IC CNY65 optoisolator	0684-1000-023
U4 8	IC 3022 photo triac driver	0684-1000-022
U7	IC 3040 zero crossing triac	0684-1000-007
VR2 3 4	IC 7805C voltage regulator 5v	0684-0600-008

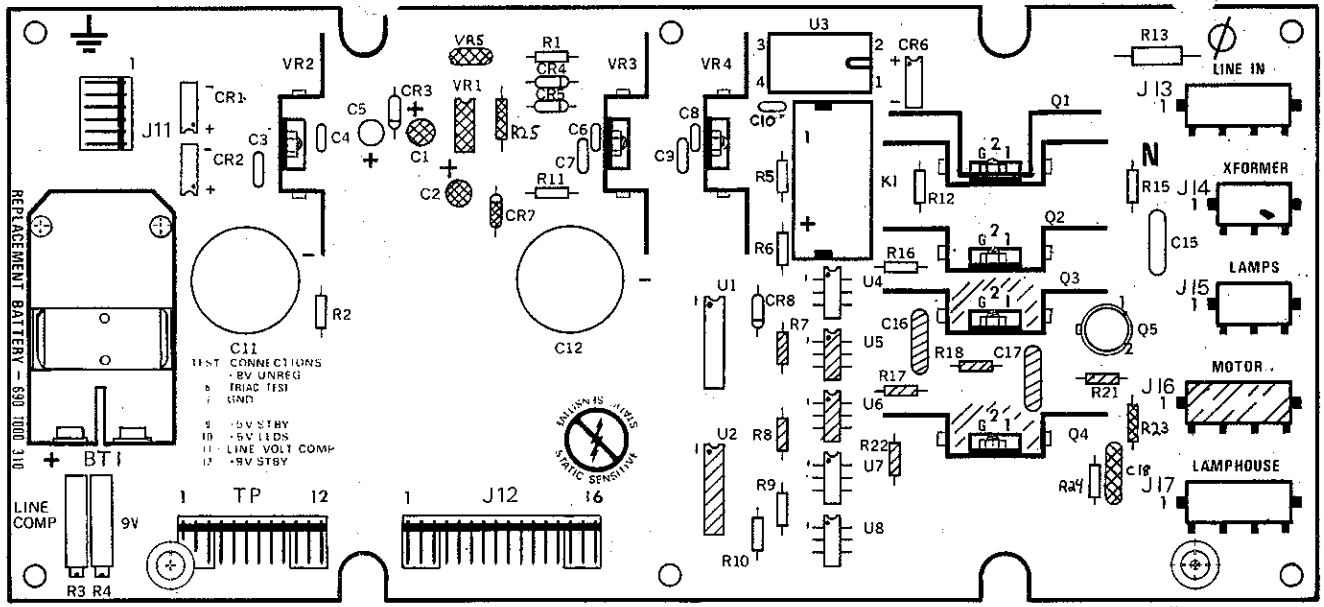

* Use Thermacote thermal Joint compound (0220-5255-300) between components VR2, VR3, VR4, Q1, Q2, and their respective heat sink parts.

Note: The following parts, as shown on the silkscreen, are not installed on this assembly. VR1, C1, C2, U2, U5, U6, Q3, Q4, C16, C17, R7, R8, R17, R18, R21, R22, CR7, J16, VR5, R25, C18, and R23.

Figure 7-7
Power Supply Board (0631-5032-700)

Parts Leg Control Board 0631-5033-700

Symbol	Description	Part Number
C1 2 4 5 7 9 10	Capacitor .1 mfd 50v 20% ceramic	0682-1189-313
C3 6 11 28 30	Capacitor 15 mfd 16v 20% tantalum	0682-2600-300
C12 13	Capacitor .27 mfd 100v 10% polyester	0682-4196-301
C14	Capacitor 220 pfd 1000v 10%	0682-1136-300
C15	Capacitor 10 mfd 20v 10% tantalum	0682-2595-302
C16	Capacitor .01 mfd 100v 10% polypropylene	0682-1170-313
C31 32	Capacitor 33 pfd 100v 5% ceramic	0682-1122-303
CR1	Diode IN4001	0683-0035-300
DS1	Diode LED Red HLMP 3366	0683-9015-301
J6	Header 12 ckt	0690-1560-451
J5	Header 16 ckt	0690-1560-452
J7	Header 3 ckt	0690-1560-453
J1	Header 2 ckt	0690-1560-454
LS1	Audio Alarm 12v QMB-06A 2 KHz	0690-1100-306
Q1 2	Transistor MPS6515 NPN	0685-0030-300
R1 33	Resistor 47k 1/4w 5% carbon film	0680-0513-300
R2	Resistor 220k 1/4w 5% carbon film	0680-0529-300
R3	Resistor 39k 1/4w 5% carbon film	0680-0511-300
R4	Resistor 6.8k 1/4w 5% carbon film	0680-0493-300
R5 17 19 36 39	Resistor 200 ohm 1/4w 5% carbon film	0680-0458-300
R6 20 21 22 23 25 28	Resistor 5.76k 1/8w 0.1% metal film	0680-2373-300
R7 8 26	Resistor 10k 1/8w 0.1% metal film	0680-2902-300
R9 41	Resistor 100k 1/4w 1% metal film	0680-0250-321
R10 11 14 18 29 30 34	Resistor 10k 1/4w 5% carbon film	0680-0497-300
R12 15	Resistor 4.7k 1/4w 5% carbon film	0680-0489-300
R13	Resistor 1 meg 1/4w 5% carbon film	0680-0544-300
R16	Resistor 1k 1/4w 5% carbon film	0680-0473-300
R24	Resistor 2.21k 1/8w 0.1% metal film	0680-2334-300
R27	Resistor 220 ohm 1/4w 5% carbon film	0680-0457-300
R31	Resistor 33k 1/4w 5% carbon film	0680-0509-300
R32	Resistor 51 ohm 1/4w 5% carbon film	0680-0442-300
R35	Resistor 510 ohm 1/4w 5% carbon film	0680-0466-300
R37 44	Resistor var 500 ohm 3/4w 10% 20 turn	0681-0087-300
R38	Resistor var 10k 3006p-1-103	0681-0004-300
R40	Resistor 75k 1/4w 1% metal film	0680-3485-300
R42	Resistor 453k 1/8w 0.1% metal film	0680-2564-300
R43	Resistor 5.9k 1/4w 0.1% metal film	0680-3915-300

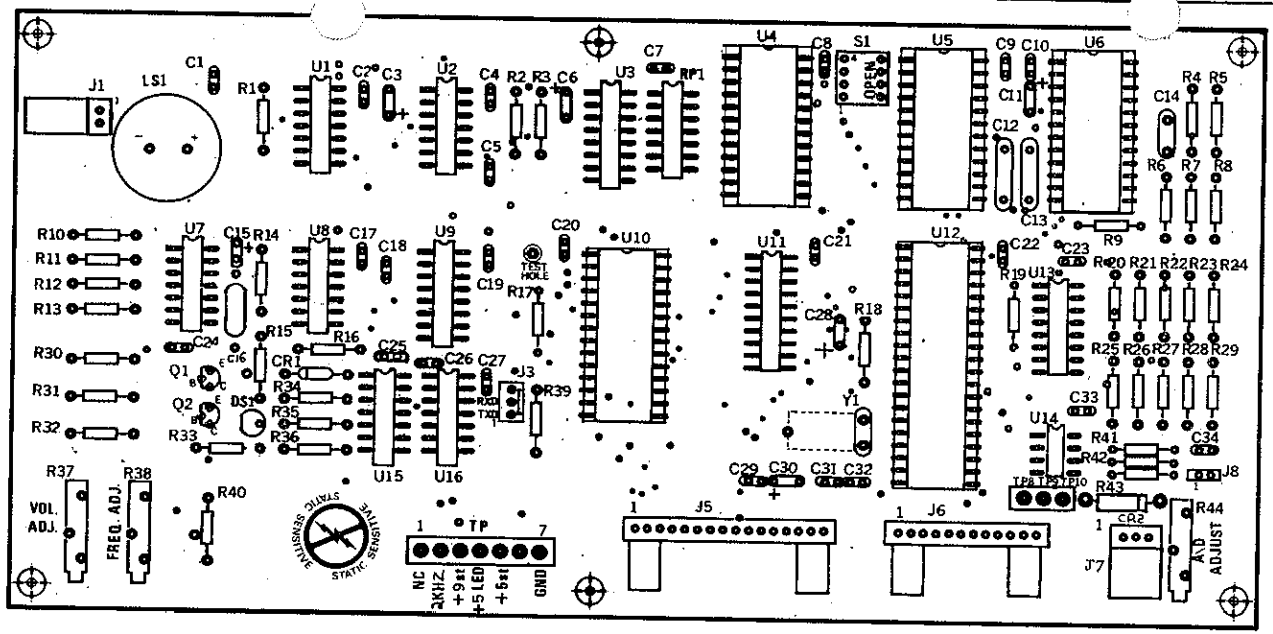

Symbol	Description	Part Number
RP1	Resistor network 10k	0680-9000-312
S1	Switch rocker spst 4 pos	0690-2502-004
TP1-TP7	Header 7 pin	0690-1563-328
TP8 9 10	Header 3 pin	0690-1563-330
U1	IC 74LS74 dual d flip flop pos edge	0684-0300-074
U2	IC 74LS08 quad 2 input and	0684-0300-008
U3	IC 74LS123 dual one shot w/clear	0684-0300-123
U4	IC 8243 input/output expander	0684-0800-002
U6	ICL7109 A/D Converter	0684-1000-021
U7	IC 7556 dual 555 timer	0684-0400-025
U8	IC 74LS132 quad 2 input Schmitt nand	0684-0300-132
U9	IC 4020 CMOS 14 bit binary counter	0684-0400-032

Symbol	Description	Part Number
U10	IC EPROM 2764 Programmed	0228-4015-400
U11	IC 74LS373 octal d latch 3 state out	0684-0300-373
U12	IC 8031 microprocessor	0684-0800-006
U13	IC 4051 CMOS 8 channel analog MPX	0684-0400-031
U14	LM10 voltage reference	0684-0600-025
For U4 5 6	Socket IC 24 pin	0686-9000-406
For U10	Socket IC 28 pin	0686-9000-407
For U 12	Socket IC 40 pin	0686-9000-408
Y1	Crystal 6 MHz HC-18/U	0686-0025-004

Note: The following parts, as shown on the silkscreen, are not installed on this assembly. U15, U16, C25, C26, C27, J3, J8, and CR2.

Figure 7-8
Control Board (0631-5033-700)

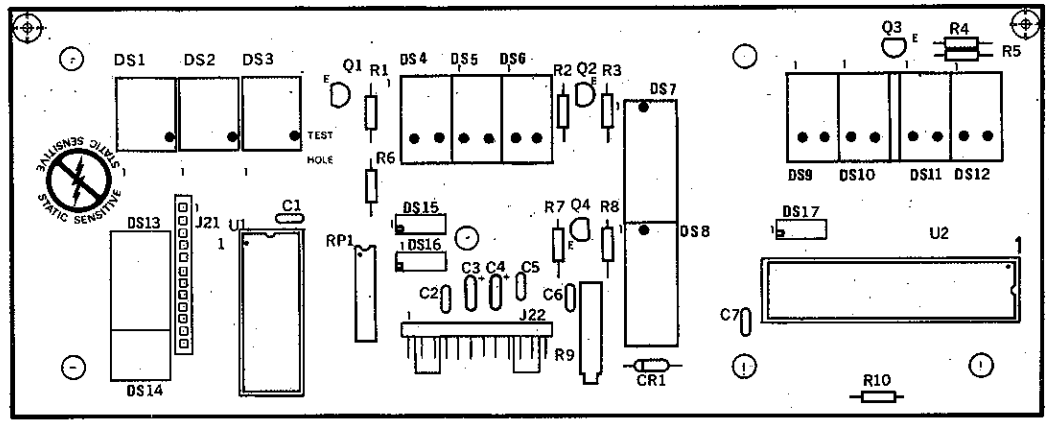

Parts Legend for Display Board 0631-5031-700

Symbol	Description	Part Number
C1 2 5 6 7	Capacitor .1 mfd 50v 20% Ceramic	0682-1189-313
C3 4	Capacitor 15 mfd 16v 20% Tantalum	0682-2600-300
CR1	Diode IN4001	0683-0035-300
DS 1 2 3	Display HDSP-5532 Red seven segment	0690-2300-326
DS 4 5 6 9 10 11 12	Display HDSP-4342 Red seven segment	0690-2300-325
DS 7 8	Display HDSP-4945 Yellow	0683-9100-300
DS 13	Display HLMP-2620 Red	0683-9020-303
DS 14	Display HLMP-2600 Red	0683-9020-302
DS 15 16 17	Display HLMP-2400 Yellow	0683-9020-304
U1	IC 8243 Input/Output Exp.	0684-0800-002
U2	IC MM 5451 Display Driver or MM 5450	0684-0900-001
For DS 1 2 3	Socket 16 pin	0690-2400-321
For DS 4 5 6 9 10 11 12	Socket 14 pin	0690-2400-312
For DS 7 8	Socket 20 pin	0690-2400-317
For DS 13 & 14	Socket 12 pin	0690-2400-320
For J21	Socket 12 pin	0690-2400-318
For DS 15 16 17	Socket 4 pin	0690-2400-316
For U1	Socket IC 24 pin	0686-9000-406
For U2	Socket IC 40 pin	0686-9000-408
J22	Connector 12 pin	0690-1560-451
R1 3 4 8	Resistor 4.7K 1/4w 5% carbon film	0680-0489-300
R2 5 6 7	Resistor 180 ohm 1/4w 5% carbon composition	0680-0380-303
R9	Resistor 5K variable 3006p-1-502	0681-0007-300
R10	Resistor 221 ohm 1/4w 1% metal film	0680-2100-300
RP1	Resistor network 10k	0680-9000-312
Q1 2 3 4	Transistor MPS-A63 PNP	0685-0050-300

Figure 7-9
Display Board (0631-5031-700)

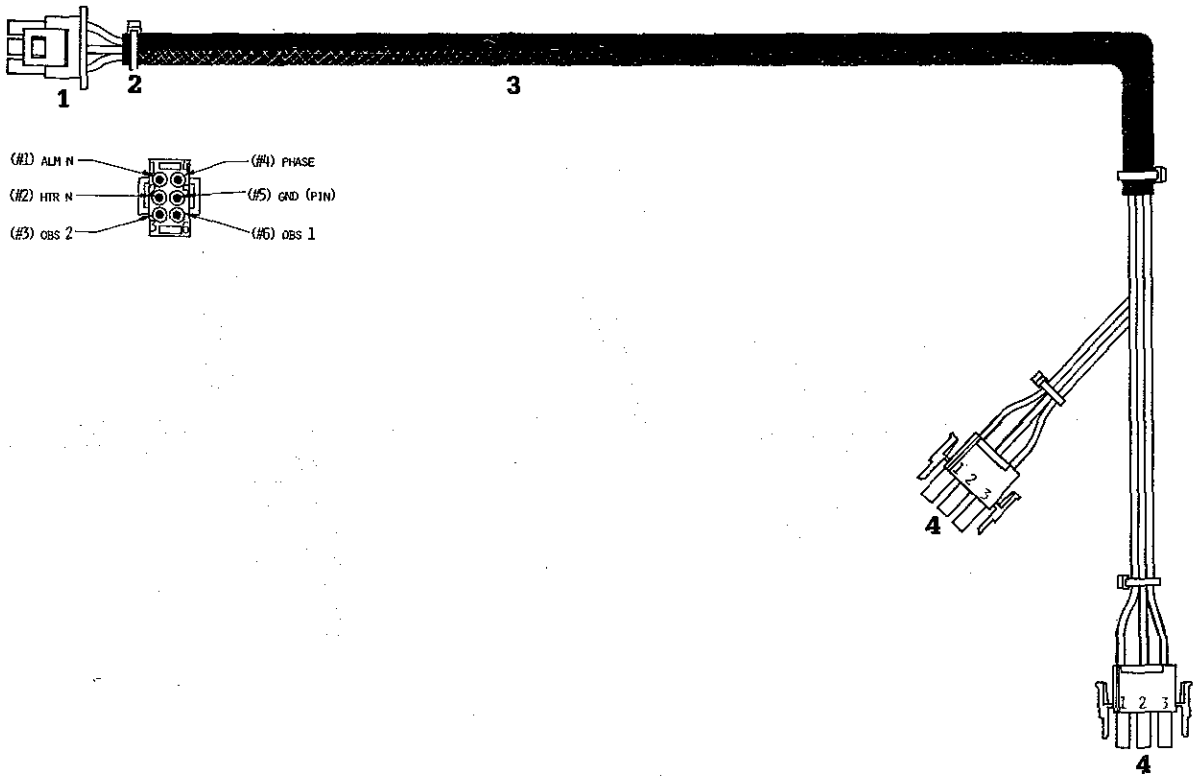

Description	Stock Number
Heater Interconnect Harness Assembly	**0208-6179-700**

Note: Replacement of the complete harness assembly is recommended.

1. 6 Circuit connector Amp #350715-1	**0690-1561-444**
Pin	**0690-1562-346**
2. Cable tie, 4 inch	**0203-5915-300**
3. Fiberglass tubing	**0999-8315-010**
4. 3 Circuit connector Amp #350766-1	**0690-1561-402**
Pin	**0690-2600-375**
Socket	**0690-1562-347**

Figure 7-10
Heater Interconnect Harness (0208-6179-700)

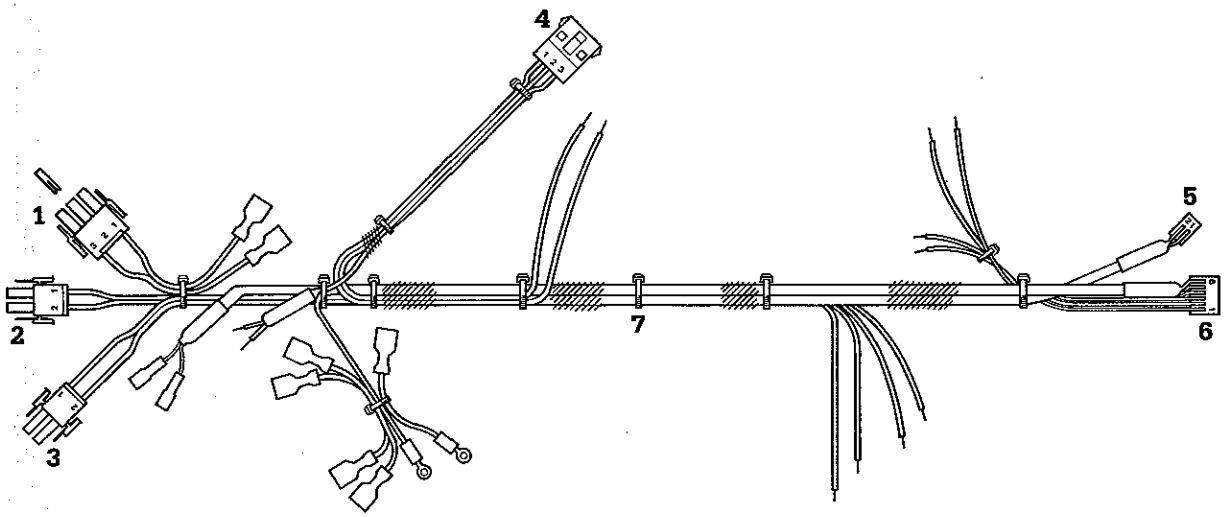

Description	Stock Number
Controller Harness Assembly	**0208-6181-700**

Note: Replacement of the complete harness assembly is recommended.

1. 3 Circuit connector Amp #350766-1	**0690-1561-402**
Socket	**0690-1562-347**
Polarizing Plug	**0690-1562-345**
2. 2 Circuit connector Amp #350777-1	**0690-1561-401**
Socket	**0690-1562-347**
3. 2 Circuit connector Amp#350777-1	**0690-1561-401**
Pin	**0690-2600-375**
4. 3 Circuit connector Amp #350767-1	**0690-1561-425**
Socket	**0690-1562-347**
Pin	**0690-2600-375**
5. 2 Circuit connector Methode#1300-102-422	**0690-1560-456**
6. 6 Circuit connector Methode #1300-106-422	**0690-1560-457**
7. Cable tie, 4 inch	**0203-5915-300**

Figure 7-11
Controller Harness Assembly

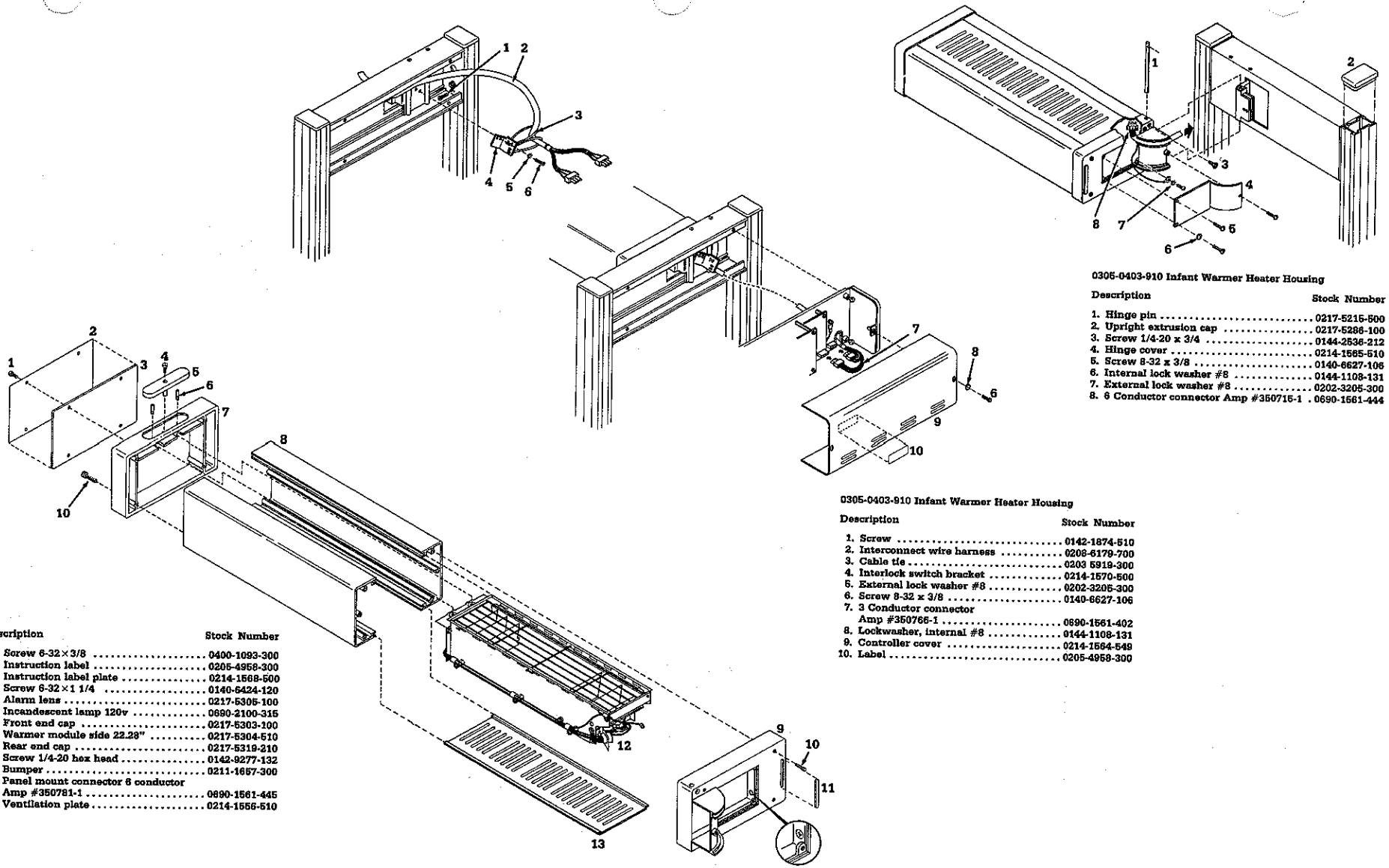

0305-0403-910 Infant Warmer Heater Housing

Description	Stock Number
1. Hinge pin	0217-5215-500
2. Upright extrusion cap	0217-5286-100
3. Screw 1/4-20 x 3/4	0144-2536-212
4. Hinge cover	0214-1565-510
5. Screw 8-32 x 3/8	0140-6627-106
6. Internal lock washer #8	0144-1108-131
7. External lock washer #8	0202-3205-300
8. 6 Conductor connector Amp #350715-1	0690-1561-444

0305-0403-910 Infant Warmer Heater Housing

Description	Stock Number
1. Screw	0142-1874-510
2. Interconnect wire harness	0208-6179-700
3. Cable tie	0203 5919-300
4. Interlock switch bracket	0214-1570-500
5. External lock washer #8	0202-3205-300
6. Screw 8-32 x 3/8	0140-6627-106
7. 3 Conductor connector Amp #350766-1	0690-1561-402
8. Lockwasher, internal #8	0144-1108-131
9. Controller cover	0214-1564-549
10. Label	0205-4958-300

Description	Stock Number
1. Screw 6-32×3/8	0400-1093-300
2. Instruction label	0205-4958-300
3. Instruction label plate	0214-1568-500
4. Screw 6-32×1 1/4	0140-6424-120
5. Alarm lens	0217-5305-100
6. Incandescent lamp 120v	0690-2100-315
7. Front end cap	0217-5303-100
8. Warmer module side 22.28"	0217-5304-510
9. Rear end cap	0217-5319-210
10. Screw 1/4-20 hex head	0142-9277-132
11. Bumper	0211-1657-300
12. Panel mount connector 6 conductor Amp #350781-1	0690-1561-445
13. Ventilation plate	0214-1556-510

Figure 7-12
Infant Warmer Heater Housing

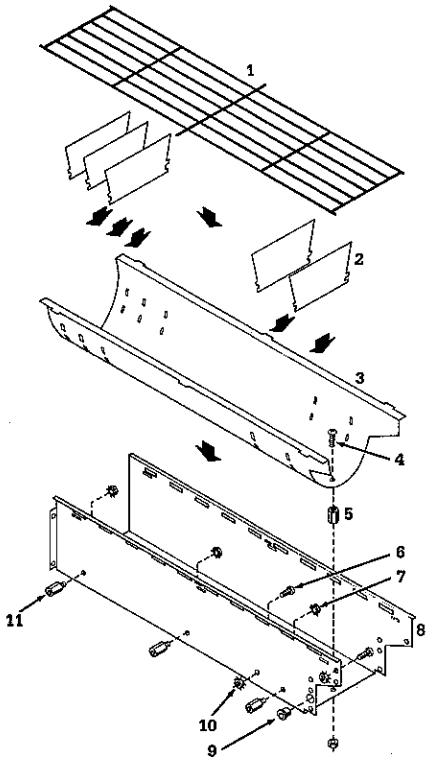

Description	Stock Number
1. Guard	6600-0027-500
2. Reflector baffle	0214-1563-500
3. Reflector	0214-1557-500
4. Screw, 6-32×7/8	0140-6124-114
5. Spacer .188ID .375OD .500L brass bar	0202-0028-500
6. Screw 8-32 x 1/2	0140-6127-108
7. Nut, #6-32 w/external lockwasher	0202-1130-300
8. Reflector box	0217-5224-500
9. Snap bushing 3/8"ID for .50 hole	0208-0628-300
10. Nut, #8-32 w/external lockwasher	0202-1131-300
11. Spacer 1/4"hex 6-32 .75L	0402-0234-300

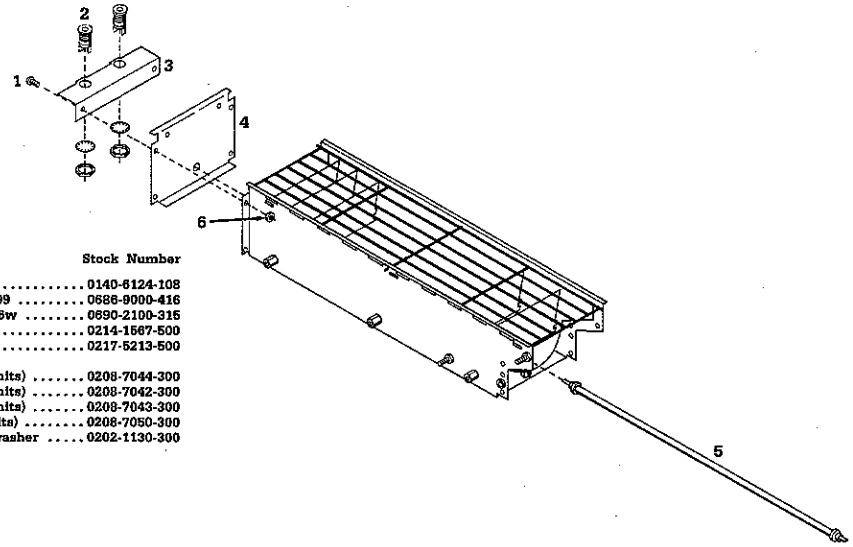

Description	Stock Number
1. Screw 6-32 x 1/2	0140-6124-108
2. Lamp socket Sylvania #31099	0686-9000-416
Lamp GTE Sylvania 120MB 6w	0690-2100-315
3. Alarm light bracket	0214-1567-500
4. Front reflector end cap	0217-5213-500
5. Heater	
104v 50-60 Hz 440w (115v units)	0208-7044-300
198v 50-60 Hz 440w (220v units)	0208-7042-300
216v 50-60 Hz 440w (240v units)	0208-7043-300
85v 50-60 Hz 440w (100v units)	0208-7050-300
6. Nut, #6-32 w/external lockwasher	0202-1130-300

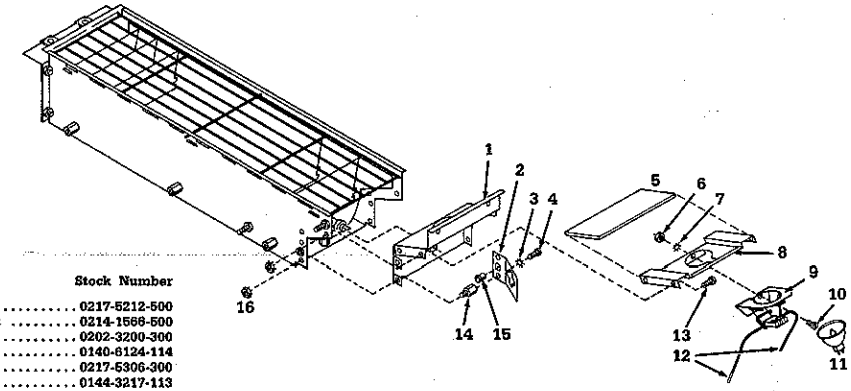

Description	Stock Number
1. Rear reflector cap	0217-5212-500
2. Wire harness socket bracket	0214-1566-500
3. External lockwasher #6	0202-3200-300
4. Screw, 6-32×7/8	0140-6124-114
5. Exam light lens 2.5 x 5	0217-5306-300
6. Nut, hex	0144-3217-113
7. Internal lock washer #4	0144-1104-131
8. Lampholder bracket	0217-5214-500
9. Lampholder	0208-0836-300
10. Screw, 4-40 x 5/16	0140-6117-105
11. Lamp 12v 50w GE EXZ(Q50 MR16/NFL) or GE EXN(Q50 MR16/FL)	0208-0516-300
12. Socket	0690-1562-347
13. Screw, 6-32 x 7/8	0140-6124-114
14. Spacer 1/4"hex 6-32 .75L	0402-0234-300
15. Snap bushing 3/8"ID for .50 hole	0208-0628-300
16. Nut, #6-32 w/external lockwasher	0202-1130-300

Figure 7-13
Infant Warmer Heater Assembly

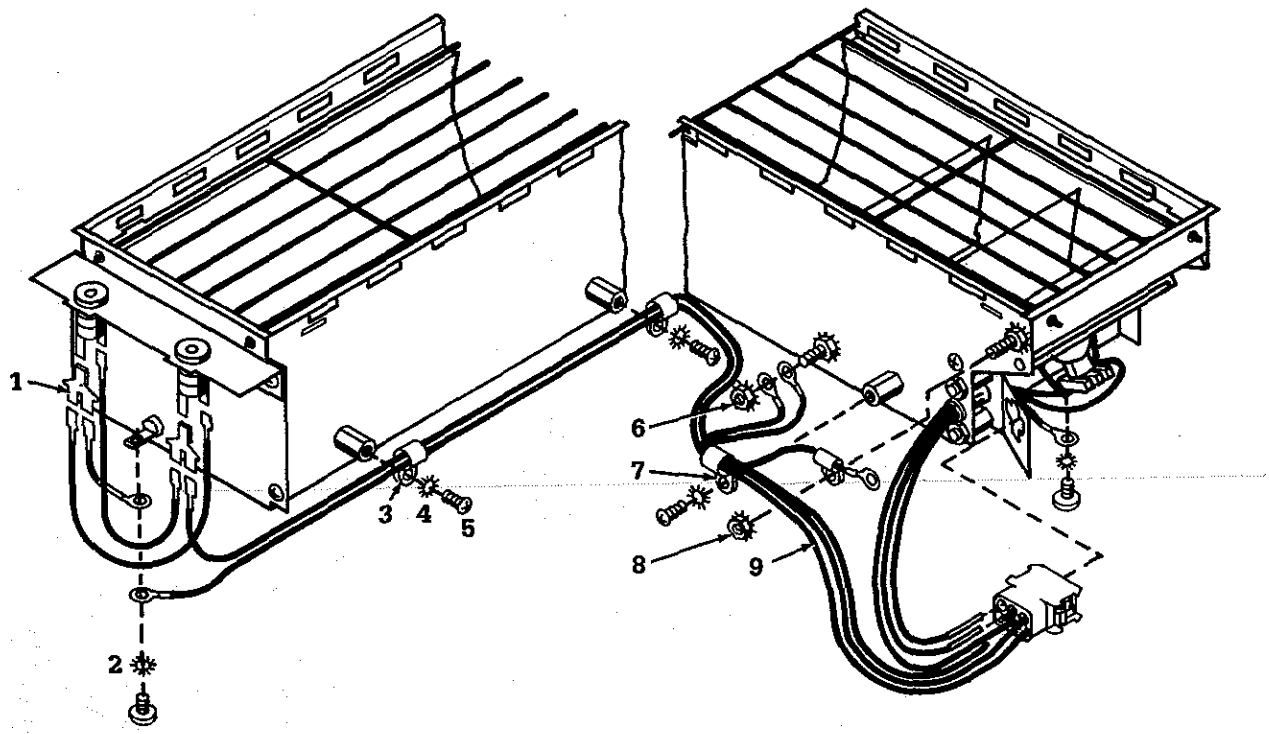

Description	Stock Number
1. Connector adapter	0208-0511-300
2. External lock washer #10	0202-3210-300
3. Cable clamp, nylon type n-2	0208-0331-300
4. Lockwasher ext-6	0202-3200-300
5. Screw 6-32 x 3-8	0140-6624-106
6. Nut, 8-32 w/external lockwasher	0202-1131-300
7. Cable clamp	0208-0446-300
8. Nut, 6-32 w/external lock washer	0202-1130-300
9. Lamphouse wiring harness	0208-6180-700

Figure 7-14
Infant Warmer Heater Wiring

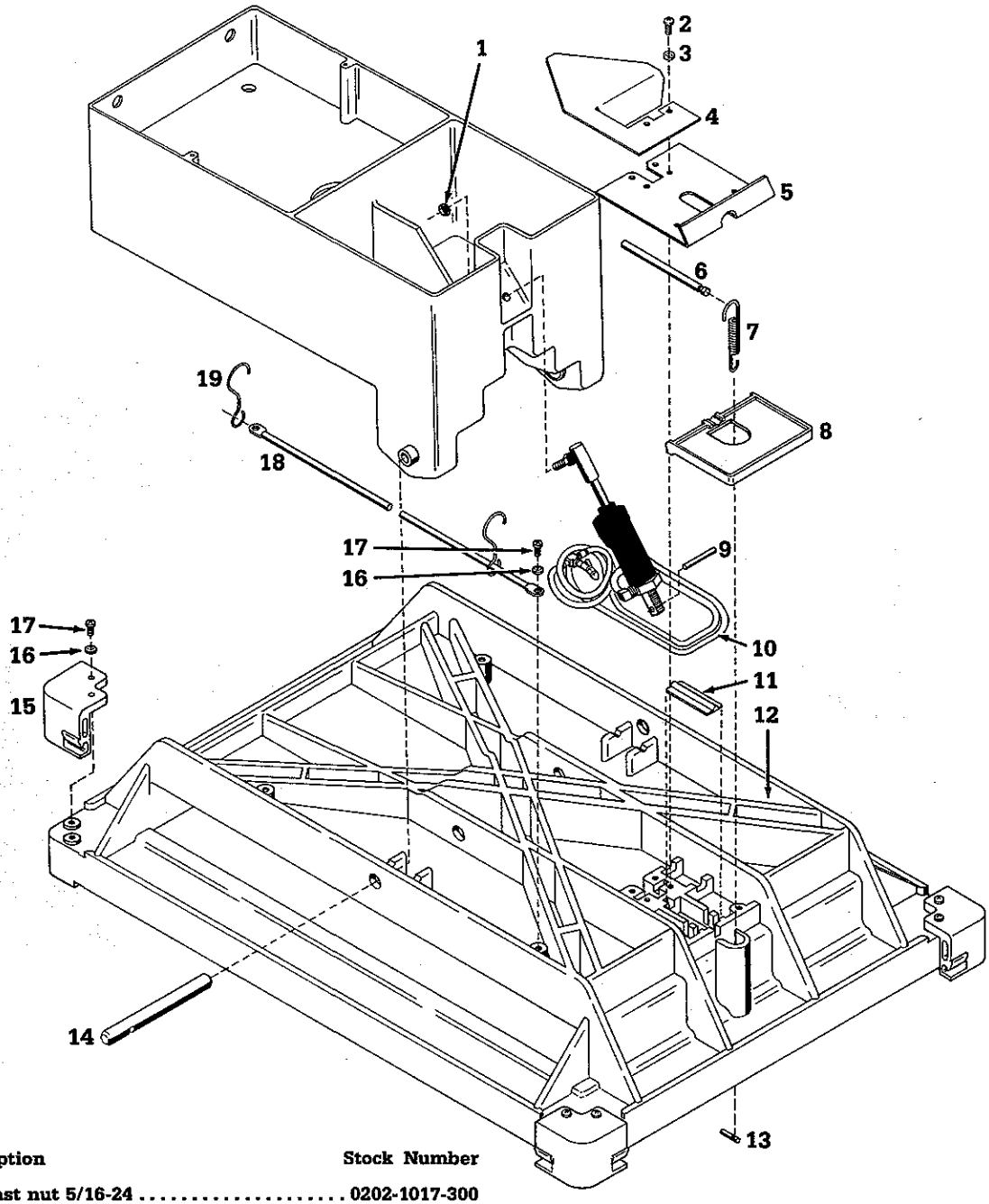

Description	Stock Number
1. Elast nut 5/16-24	0202-1017-300
2. Screw 10-24 x 5/16	0140-6530-105
3. Lockwasher #10	0144-1110-131
4. Tubing cover plate	0214-2268-511
5. Tilt plate cover	0217-5261-510
6. Actuator rod	0217-5323-500
7. Extension spring	0203-3103-300
8. Bed tilt lever	0217-5277-100
9. Pin	0217-5321-500
10. Hydraulic system assembly	0217-5360-810
Ball joint	0217-5318-300
11. Valve bed hydraulic plate	0217-5283-100
12. Bed (model 3300)	0217-5316-100
13. Pin	0217-5322-500
14. Pivot rod	0217-5312-549
15. Corner block	0217-5278-100
16. Lockwasher#10	0144-1110-131
17. Screw 10-24 x 5/16	0140-6530-105
18. Rod	0217-5313-300
19. Hook	0203-5194-300

Figure 7-15
Infant Warmer Bed

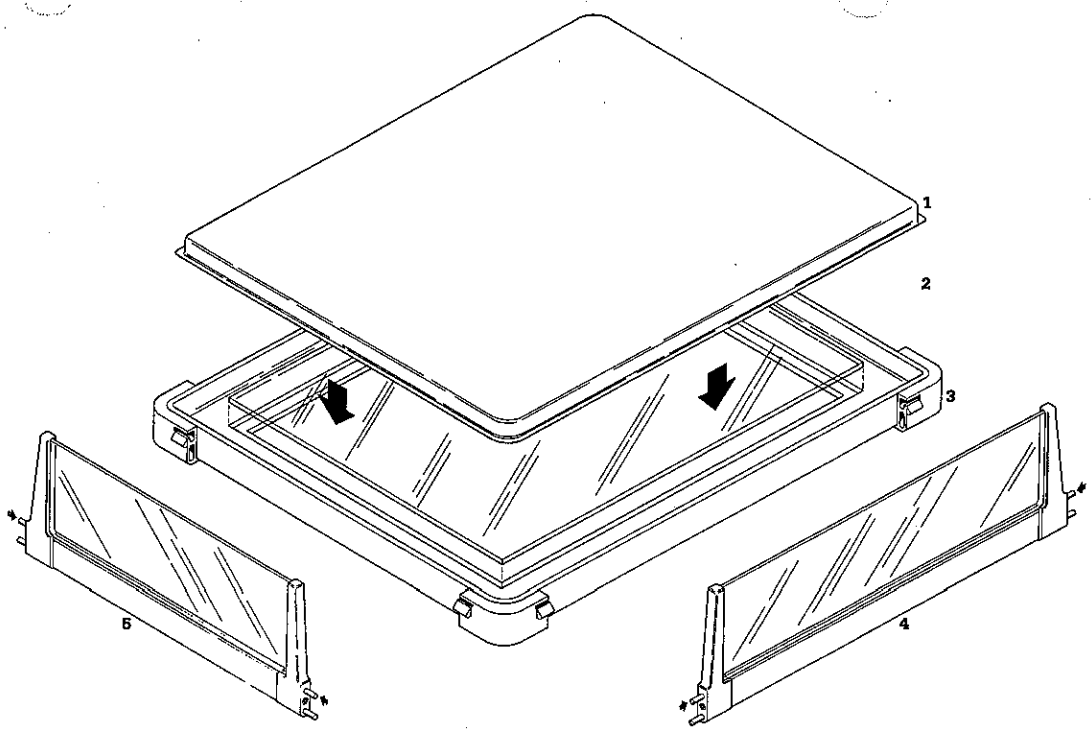

Description	Stock Number
1. Foam mattress	0305-5060-300
2. Clear plastic bed support	0217-5221-300
3. Corner block	0217-5278-100
Mounting screw	0140-6530-105
Washer	0144-1110-131
4. Left and right bed side 20 inch	0217-5361-811
5. Front and rear bed side 15 inch	0217-5361-810

Figure 7-16
Bed Assembly

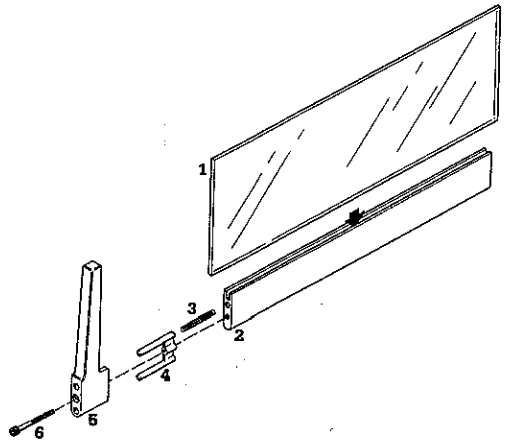

Description	Stock Number
1. Window, front and rear	0212-1001-300
Window, left and right	0212-1002-300
2. Bed side, front and rear	0217-5280-300
Bed side, left and right	0217-5281-300
3. Spring	0203-3262-300
4. Support button	0217-5275-100
5. End bracket	0217-5279-100
6. Mounting screw	0144-2130-224

Figure 7-17
Window Assembly

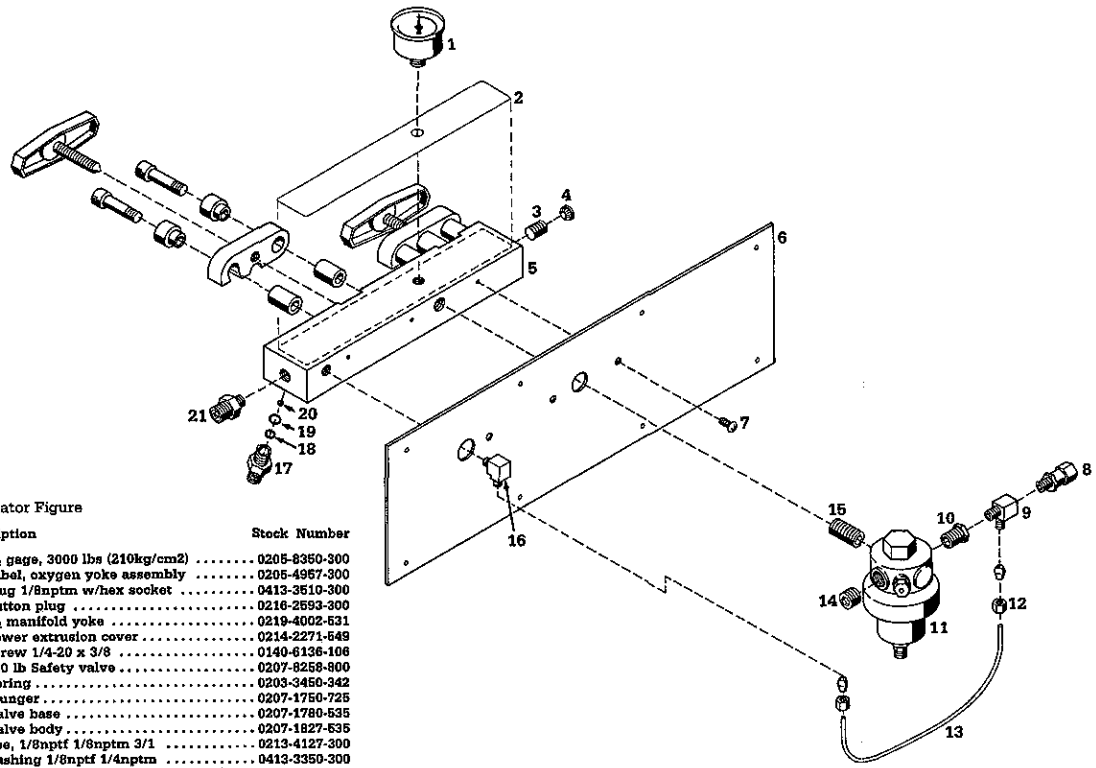

Regulator Figure

Description	Stock Number
1. O_2 gage, 3000 lbs (210kg/cm2)	0205-8350-300
2. Label, oxygen yoke assembly	0205-4957-300
3. Plug 1/8nptm w/hex socket	0413-3510-300
4. Button plug	0216-2593-300
5. O_2 manifold yoke	0219-4002-531
6. Lower extrusion cover	0214-2271-549
7. Screw 1/4-20 x 3/8	0140-6136-106
8. 100 lb Safety valve	0207-8258-800
Spring	0203-3450-342
Plunger	0207-1750-725
Valve base	0207-1780-535
Valve body	0207-1827-535
9. Tee, 1/8nptf 1/8nptm 3/1	0213-4127-300
10. Bushing 1/8nptf 1/4nptm	0413-3350-300
11. 9200 Series Regulator (earlier type)	
Single stage O_2 regulator	0805-9290-300
Regulator Repair Kit	0306-9951-870
O-ring	0830-3907-300
Seat	0830-4545-300
Pin	0830-4544-300
Spring	*0830-4551-300*
8000 Series Regulator (latest type not shown)	
Single stage O_2 regulator	6600-0003-700
Regulator Repair Kit	0306-9950-870
Spring	0830-0173-300
Relief Seat	0830-0917-300
Diaphragm	0830-1680-325
Slip Ring	0830-1685-325
Thrust Plate	0830-1687-325
Retainer	0830-2625-325
O-ring	0830-2627-300
Spring	0830-2628-325
Seat Holder	0830-2635-325
Seat	0830-2636-325
Pin	0830-3082-325

12. Hex nut 3/8-16	0144-3345-113
13. Copper tube	0213-8022-300
14. Hex socket plug 1/4nptm	0413-3511-300
15. Close nipple 1/4npt	0413-1099-325
16. 3/16 Compression elbow 1/8nptm	0413-8566-300
17. O_2 Connector DISS 9/16	0204-0508-532
18. O-ring .260ID .375OD	0210-0596-300
19. O-ring .312ID .437OD	0210-0601-300
20. Steel ball	0409-1697-300
21. O_2 DISS Outlet 1/8 NPTM	
single check	0205-0540-800
Piston	0205-0413-535
O-ring	0210-0559-300
Adapter	0205-0412-535

Note: Seal pipe threads with Loctite # 79 or Teflon tape.

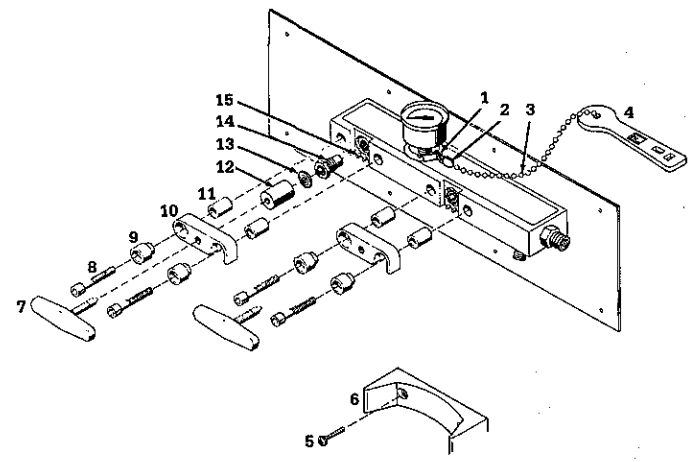

Manifold Block Figure

Description	Stock Number
1. Split ring, 1 inch	0203-2390-300
2. Bead chain clip	0203-0100-300
3. Bead chain, no. 10 (3/16inch)	0203-0068-500
4. Cylinder wrench	0203-2174-200
5. Screw #8 x 5/8	0142-2244-210
6. Cylinder bumper	0212-1060-100
7. Tee handle	0219-3372-600
8. Screw 3/8-16 x 2-1/4	0144-2145-224
9. Sleeve	0236-0202-535
10. Gate hanger	0236-0203-531
11. Yoke spacer	0202-0054-535
12. Yoke plug	0206-3040-542
13. Gasket	0210-5023-300
14. * *Yoke check valve*	*0207-8081-800*
Strainer	0206-2805-725
Plug	0206-7125-325
Cap	0206-2314-525
Seat	0206-2317-540
15. Groove pin	0143-3210-410

* Torque to 26-30 ft/lbs.

Note: Seal pipe threads with Loctite # 79 or Teflon tape.

Figure 7-18
Oxygen Yoke and Regulator Assembly 0217-5260-800

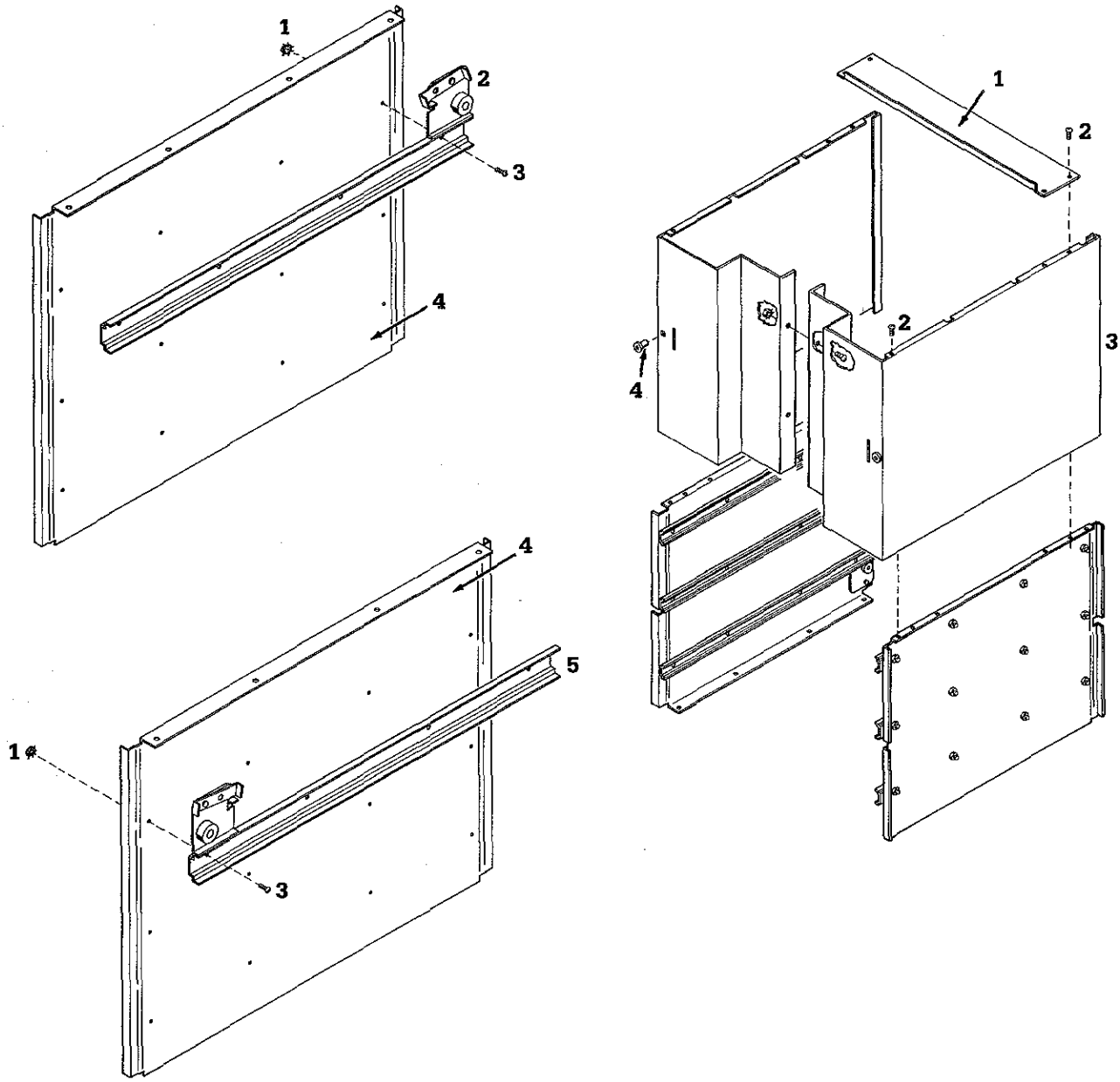

Description	Stock Number
Drawer Kit Accessory IWS 3300	0217-5379-800
1. Lock nut #6-32	0202-1130-300
2. Right slide channel 18.00 inches	0203-2510-300
3. Screw #6-32 x 5/16	0140-6724-105
4. Side drawer panel	0214-1572-510
5. Left slide channel 18.00 inches	0203-2509-300

Description	Stock Number
1. Cabinet spacer	0214-1574-510
2. Screw #8 x 3/8	0142-4234-106
3. Outer drawer panel	0217-5356-710
4. Rivnut, 8-32 x 1/2	0145-1327-310

Figure 7-19
Drawer Assembly 1

Description	Stock Number
IWS Acessories	
Tape teflon	0220-5050-300
Lubriplate	0616-0203-300
1. Plastic drawer	0217-5220-400
2. Post screw 1/4 inch	0203-5611-300
3. Right slide track 18.00 inches	0203-2507-400
4. Drawer front	0214-1576-510
5. Left slide track 18.00 inches	0203-2508-400

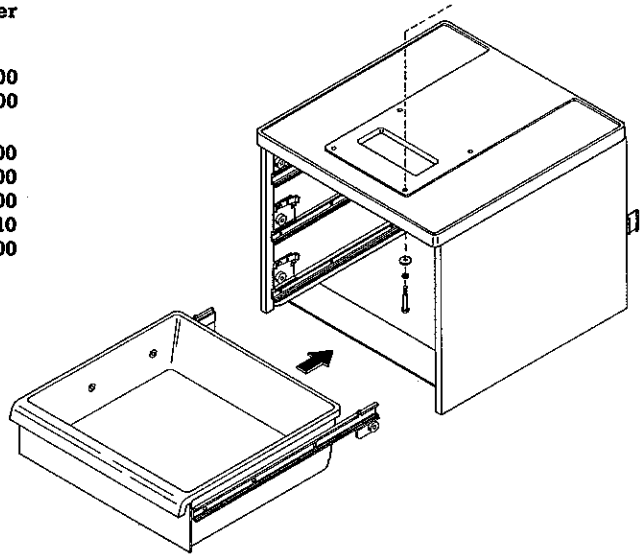

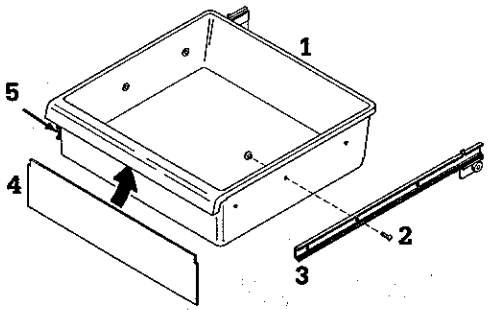

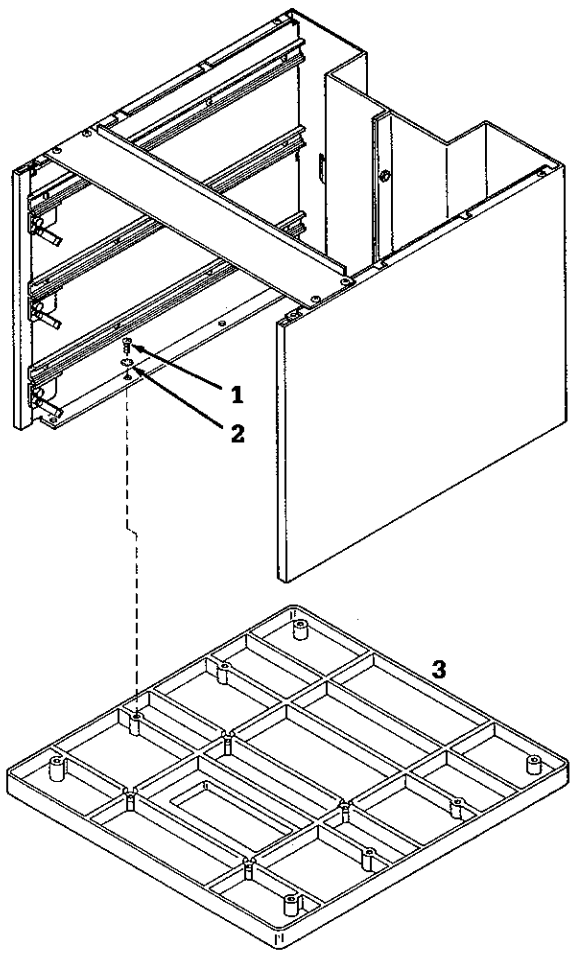

Description	Component
1. Screw, #10 x 1/2	0142-4236-108
2. Internal lock washer#10	0144-1110-131
3. Drawer cabinet top	0217-5272-100

Figure 7-20
Drawer Assembly 2